Thom,

This is what we have:

Document 1 (F9 Supplement, 10/73) 24 pages:
- F 6.1: Description of Heating System
- F 6.2: Fault finding
- F 6.3: Checking and Adjusting Parts
- F 6.4: Removing and Installing Parts

Document 2 (Repair Manual Type 2 -- Supplement 12 of July 77) 18 pages

Document 3 (Heater Booster) 19 pages
- Air-cooled AFC
- Diesel

Document 4 (exploded view diagrams) 6 pages
- #26: up to model 211 2300 000 (BN2?)
- #27 and 27-10: models 212 2000 001 -- 213 2300 000 (BN4?)
- # 27-20 and 27-30: models after 214 2000 001 (BA6)

Document 5 (actually for BN4) 9 pages
- German original
- English translation

Supplement 12

of July 1977

Repair Manual Type 2

1st edition

Apply label SUPPL 12 to manual page General

Subject: Heater booster BA6

Technical data

Heat output of BA 6 heater at maximum temperature setting	approx. 5100 to 5900 kcal/h (20,200 to 23,400 BTU/h)
Heat output of engine heating with engine at maximum speed	approx. 12,500 kcal/h (49,600 BTU/h)
Fuel	vehicle fuel
Fuel consumption at maximum temperature	approx. 1.1 to 1.3 liter/h (2.3 to 2.7 US pt/h)
Operating range at an ambient temperature of	10 – 14 volts – 40° to + 20°C (– 40° to + 68°F)
Nominal voltage	12 volts

Power consumption in various operating conditions (in watts)	approx.
Power consumption when vehicle is in motion:	
during start-up with engine running fast	300
during start-up with engine running slowly	400
when heating with engine running fast	160
when heating with engine running slowly	260
Power consumption when engine is not running:	
during start-up	240
when heating	100

CO content in exhaust gas over entire operating range (except start-up)	less than 0.2% of volume
Start-up time (glow time of glow/spark plug)	less than 70 seconds
Run-on time	approx. 80 to 160 seconds

W42-02-6120-1

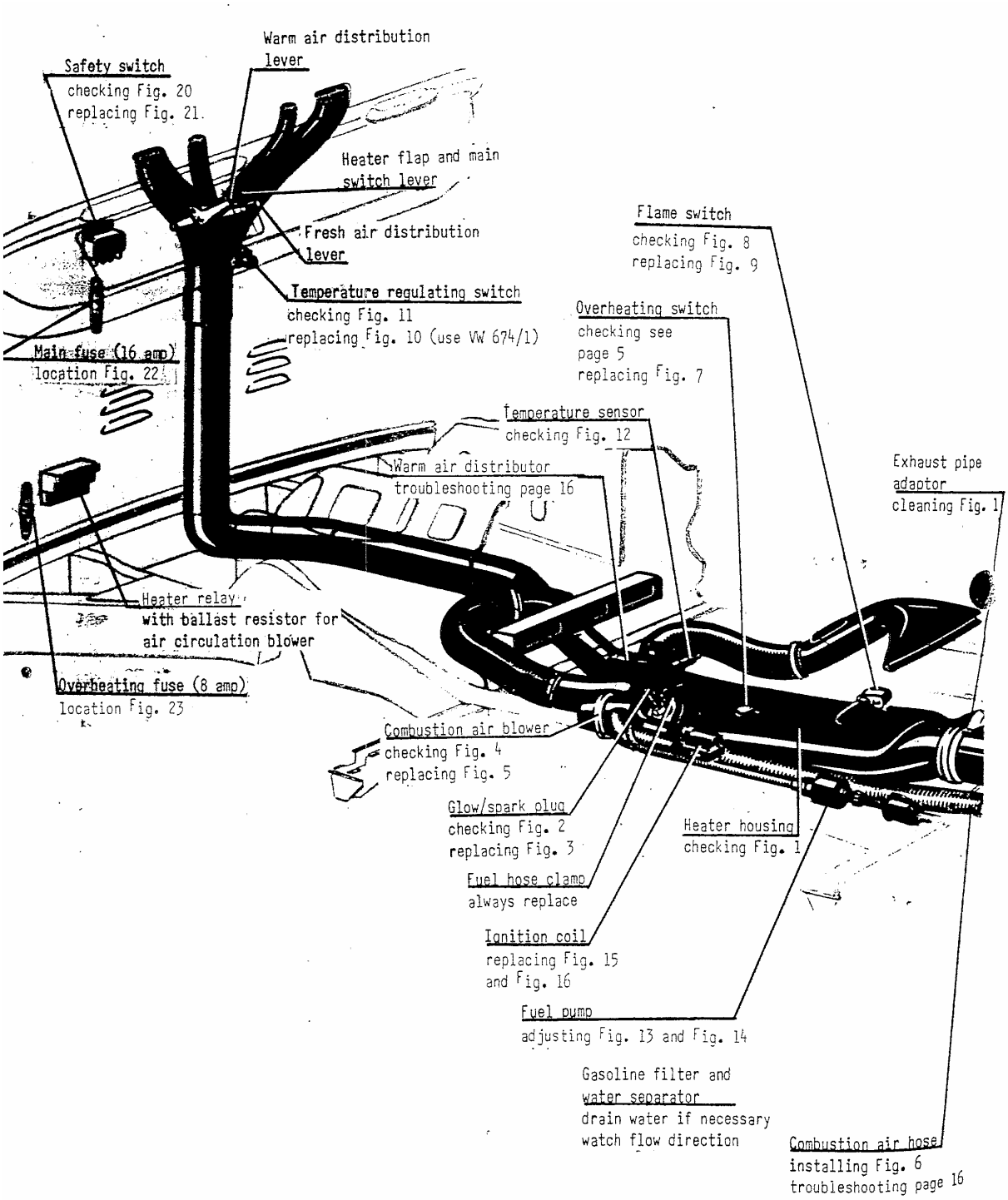
Warm air distribution lever
Safety switch
checking Fig. 20
replacing Fig. 21.
Heater flap and main switch lever
Fresh air distribution lever
Temperature regulating switch
checking Fig. 11
replacing Fig. 10 (use VW 674/1)
Main fuse (16 amp)
location Fig. 22
Flame switch
checking Fig. 8
replacing Fig. 9
Overheating switch
checking see page 5
replacing Fig. 7
Temperature sensor
checking Fig. 12
Warm air distributor
troubleshooting page 16
Exhaust pipe adaptor
cleaning Fig. 1
Heater relay
with ballast resistor for air circulation blower
Overheating fuse (8 amp)
location Fig. 23
Combustion air blower
checking Fig. 4
replacing Fig. 5
Glow/spark plug
checking Fig. 2
replacing Fig. 3
Heater housing
checking Fig. 1
Fuel hose clamp
always replace
Ignition coil
replacing Fig. 15
and Fig. 16
Fuel pump
adjusting Fig. 13 and Fig. 14
Gasoline filter and water separator
drain water if necessary
watch flow direction
Combustion air hose
installing Fig. 6
troubleshooting page 16

2

Supplement 12

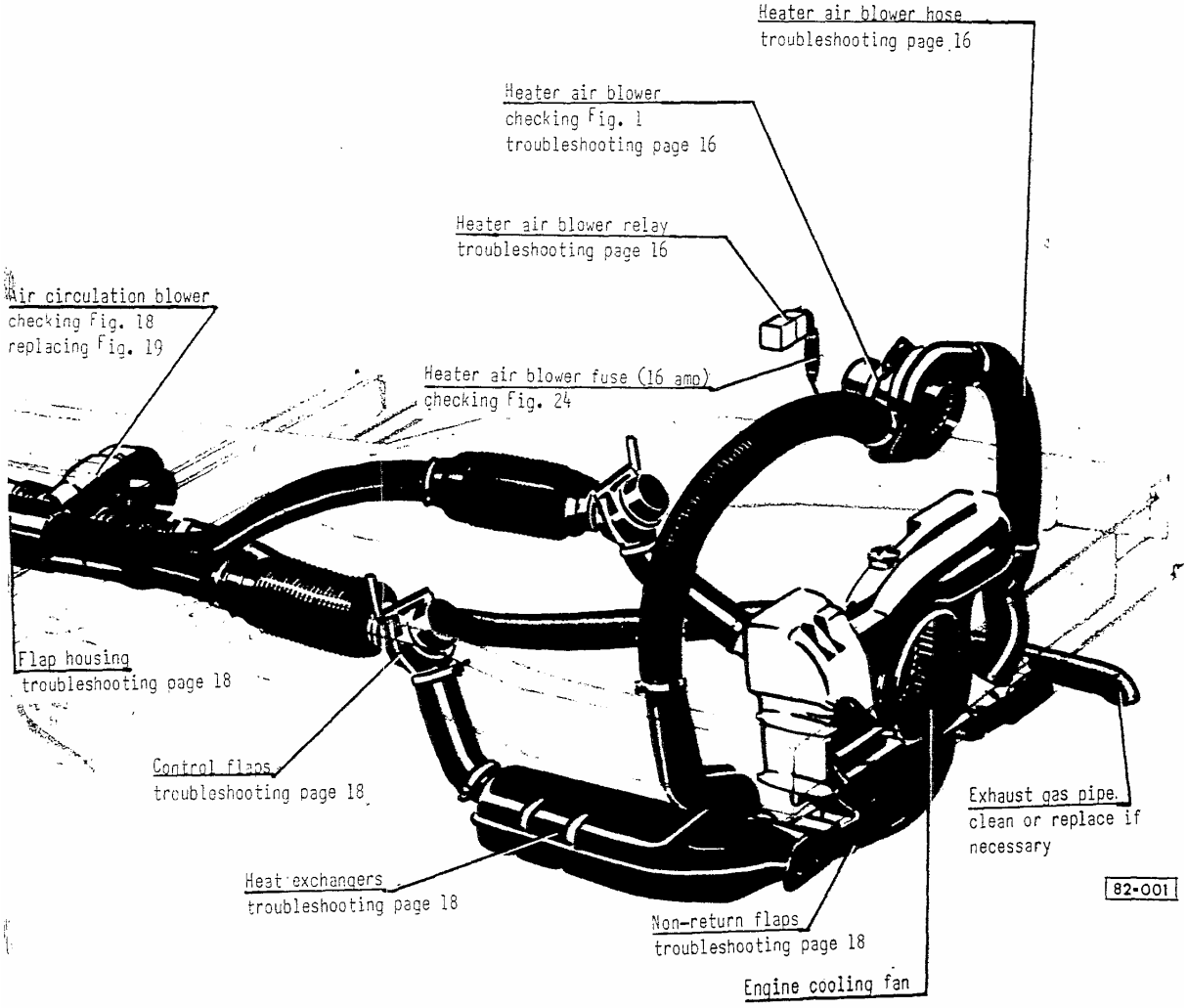

3

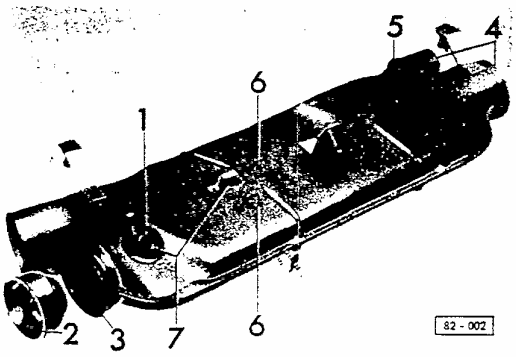

Fig. 1 Heater booster, checking

1 - glow/spark plug adaptor - if carbon-fouled clean with toothbrush
2 - combustion air blower vane housing - if burned replace
3 - combustion chamber - if carbon-fouled clean
4 - fresh air inlet - if dirty clean
5 - exhaust pipe adaptor - if tar-like deposits are noticeable replace
6 - heater booster housing - if distorted by overheating replace
7 - gaskets - if damaged by overheating replace

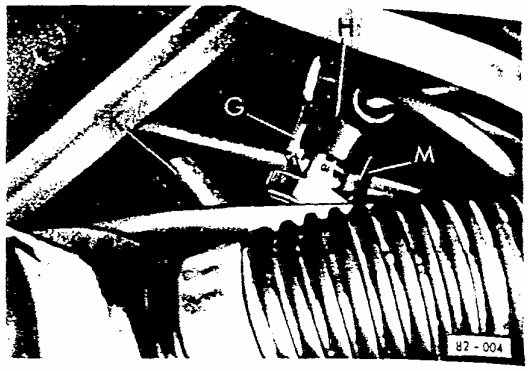

Fig. 3 Glow/spark plug, replacing

K - fuel connection
G - glow element terminal
M - ground terminal
H - high tension terminal

CAUTION

Connectors of terminals G and M must not contact plug connector H as this may cause ignition trouble

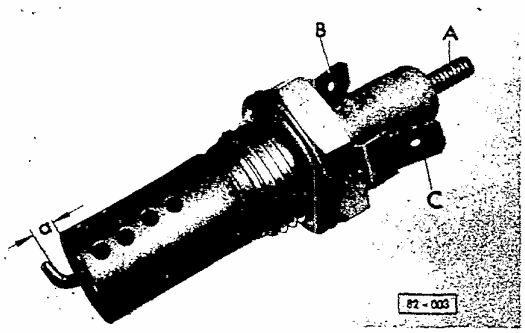

Fig. 2 Glow/spark plug, checking

A - high tension terminal
B - glow element terminal
C - ground terminal

electrode gap "a": 2.5 mm (3/32 in.)
voltage : 12 volt
resistance : 4 - 6 k
current draw of glow element : 10.2 amps

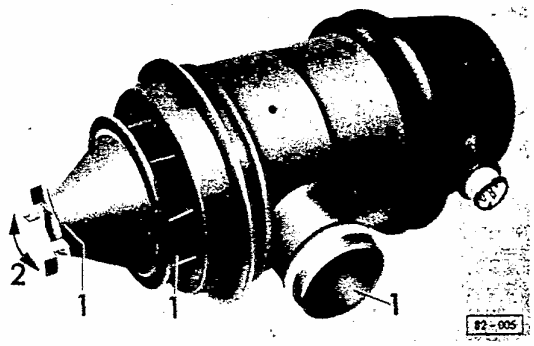

Fig. 4 Combustion air blower, checking

- check for damage caused by overheating (1)
- check for free movement by blower bearing (2) turn in both directions

Note

Fuel is injected by pump every 33 rd revolution of blower shaft. Each injection stroke can be detected by a ticking noise from pump

Number of pump strokes X 33 = speed

speed: 6400 - 7000 rpm
(at 12 volts after running for 10 minutes)

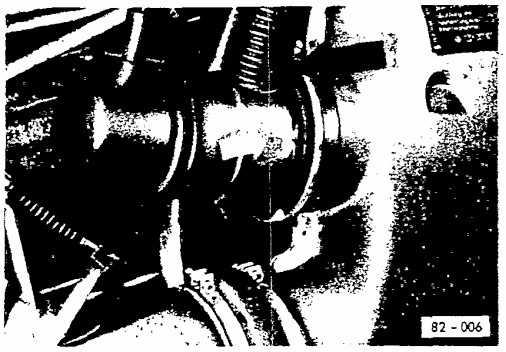

Fig. 5 Combustion air blower, installing

- condensate drain hole in housing must be at bottom (white arrow)

CAUTION

Combustion air hose must fit tightly on blower (black arrow in Fig. 5) and in frame cross member (arrow) Fig. 6

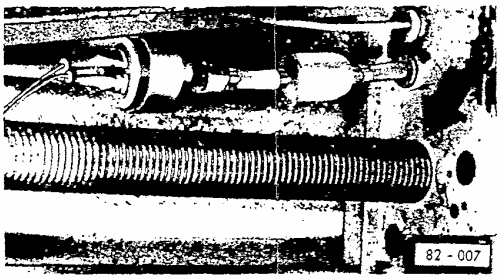

Fig. 6 Combustion air hose, installing

Overheating switch,checking
(switch installed)

Work sequence

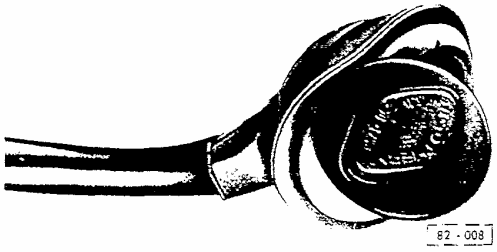

- turn heater on (engine not running)
- heater must start working within 70 seconds

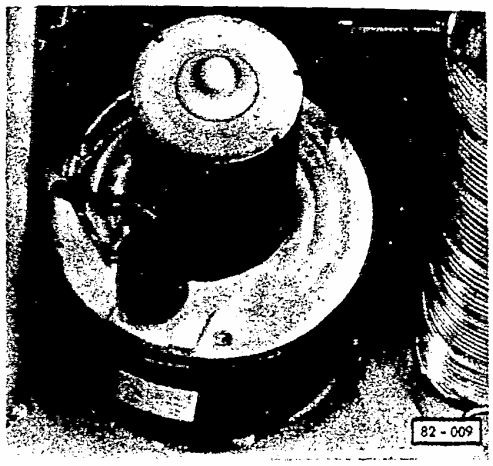

- disconnect air circulation blower
- measure elapsed time when blower is disconnected and until fuel pump stops ticking (overheating fuse blown)
- elapsed time should be 60 to 140 seconds

if yes - overheating switch is OK (replace fuse)
if no - replace overheating switch and fuse

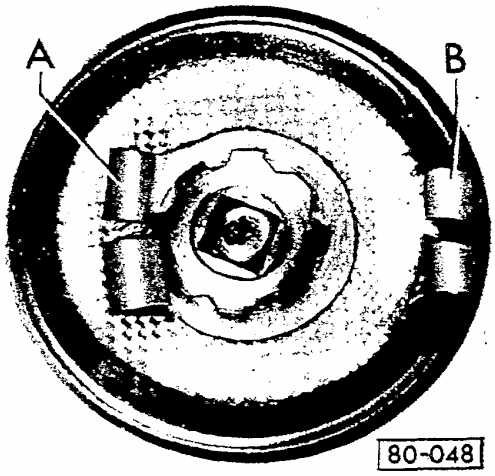

Fig. 7 Overheating switch, replacing

- crimp green wire to terminal A
- crimp brown wire to terminal B
- solder wires (use rosin-core solder)

5

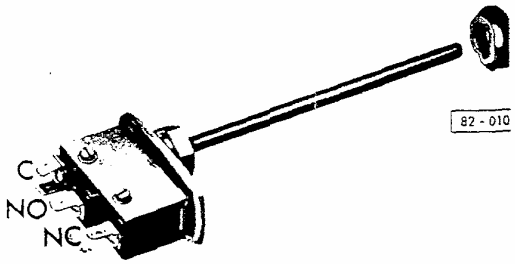

Fig. 8 Flame switch, checking

C = common
NO = normally open
NC = normally closed

operation time:
within 70 seconds at 20°C/68°F

run-on time:
between 80 and 160 seconds at 20°C/68°F (see current flow diagram on page 82.10 and operating principles)

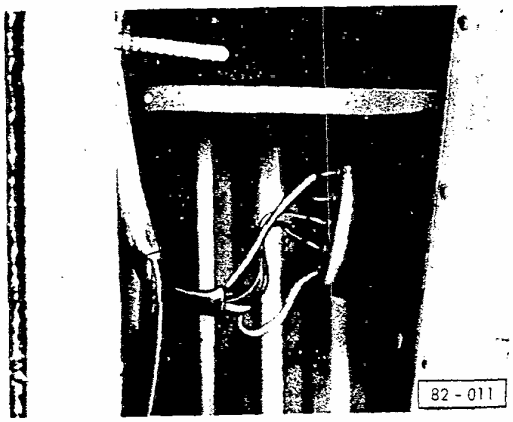

Fig. 9 Flame switch, replacing

- pull rubber grommet off carefully
- remove union nut and pull switch out

CAUTION

Do not bend sensor tube

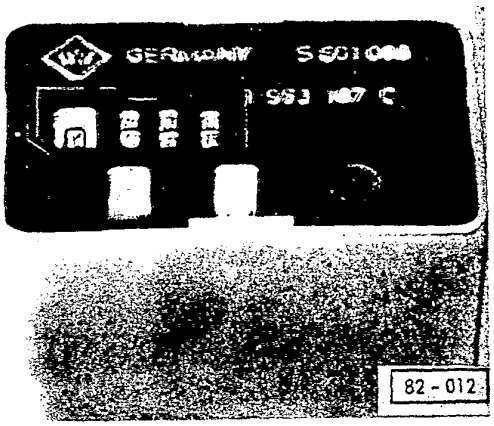

Fig. 10 Temperature regulating switch, replacing

CAUTION

Disconnect battery ground strap before starting to work

- do not interchange wires of terminals 31 and K (outside of multi-pin connector) as this will cause short circuit in switch

Fig. 11 Temperature sensor, checking regulating operations (regulating switch installed)

- turn heater on
- disconnect either wire to temperature sensor (very briefly or overheating switch will operate)
- fuel pump should continue to run

if yes - temperature regulation OK
if no - replace temperature regulating switch

- bridge temperature sensor terminals
- fuel pump should stop running

if yes - temperature regulation OK
if no - replace temperature regulating switch
- if temperature regulation is still not correct, check temperature sensor

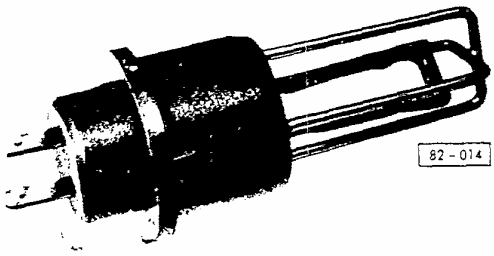

Fig. 12 Temperature sensor, checking

- place in warm water (60°C/140°F)
  resistance: 3.5 to 5 k

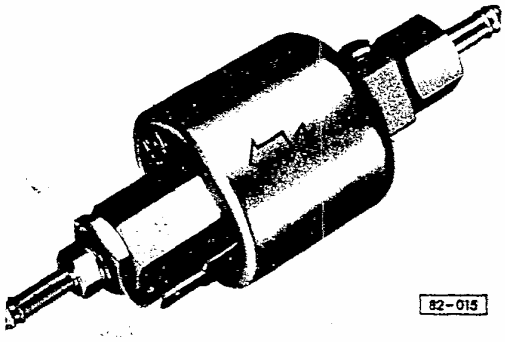

Fig. 13 Fuel pump, checking
(pump installed)

arrow A = direction of fuel flow

- remove hose on pressure side of pump
- connect a piece of hose to pump and hold into measuring glass
- turn on heater
- check amount of fuel in measuring glass after 200 strokes of pump

amount: 18.4 to 21.7 cm^3

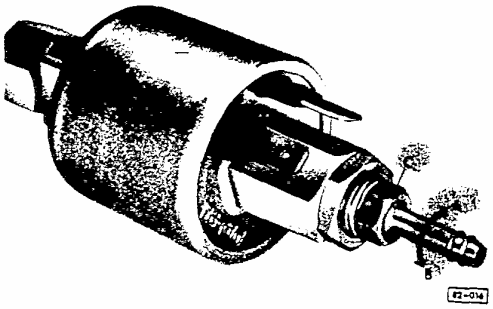

Fig. 14 Fuel pump, adjusting

to increase amount of delivery:
turn hose adaptor (c) in direction of arrow B

to decrease amount of delivery:
turn hose adaptor (c) in direction of arrow A

- lock and seal with paint after adjustment

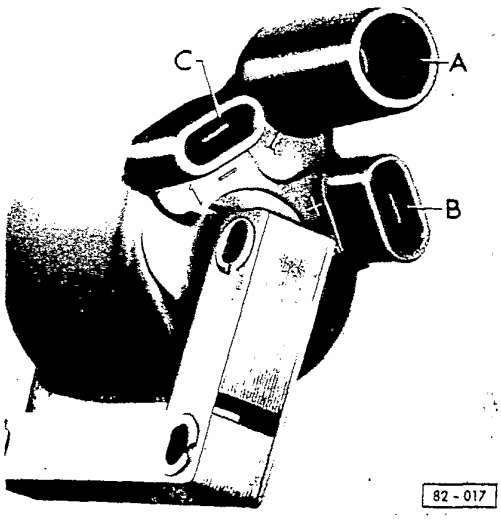

Fig. 15 Ignition coil, replacing

A – high tension connection
B – terminal 15
C – terminal 1

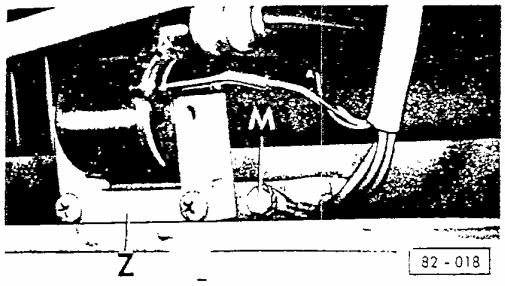

Fig. 16 Ignition coil, replacing

Z – ignition coil
M – ground connection

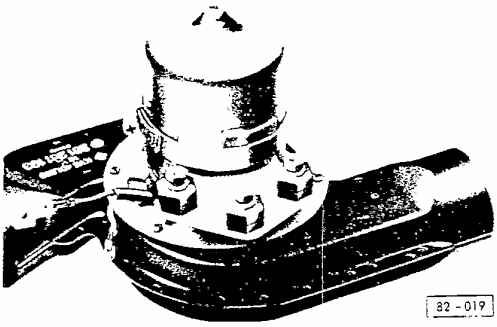

Fig. 17 Heater air blower, checking
(blower installed)

current draw:
6 – 7 amps with engine idling

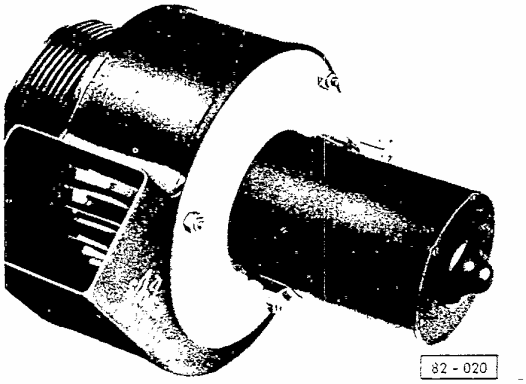

Fig. 18 Air circulation blower, checking
(blower installed)

current draw:
(engine not running)
1st stage: 3.2 to 3.7 amps
(with 1 Ω series resistance)
2nd stage: 6.3 to 7.2 amps

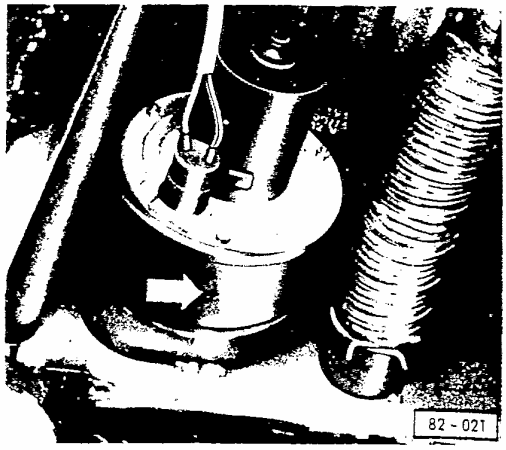

Fig. 19 Air circulation blower, replacing

– condensate drain hole (arrow)
must be at bottom

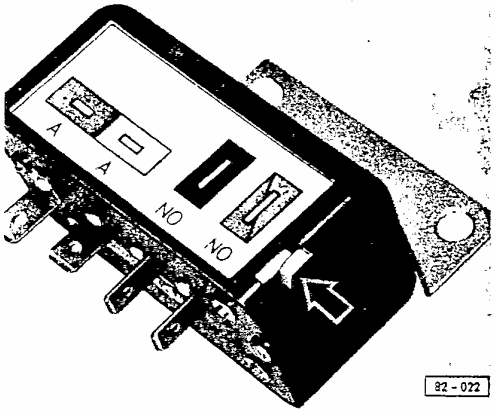

Fig. 20 Safety switch, checking
(switch removed)

- connect ohmmeter to terminals A
- apply 12 volts to terminals NO
- measure elapsed time when voltage is applied until contact is interrupted at terminals A

switch response time:
150 to 230 seconds at 20°C/68°F

Note

If safety switch has operated within required time, press reset lever in direction of arrow

8

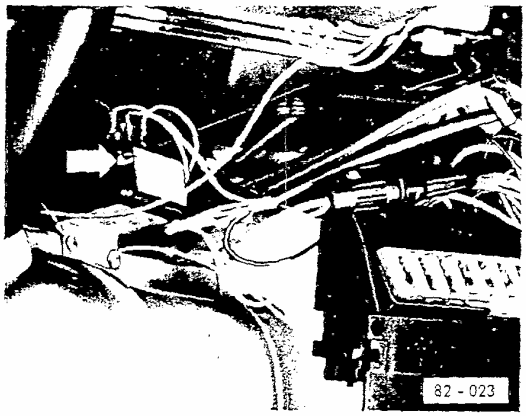

Fig. 21 Safety switch (arrow), replacing

- disconnect battery ground strap

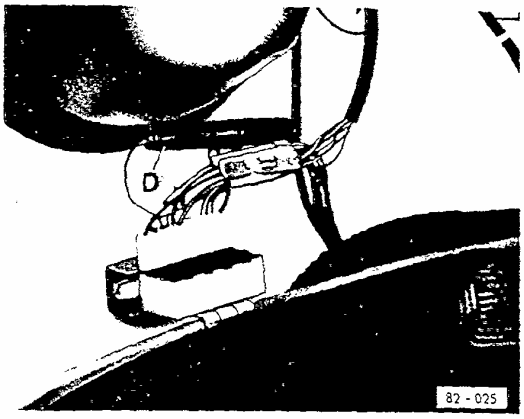

Fig. 23 Overheating fuse, location

D - inline fuse - 8 amps (green wiring)

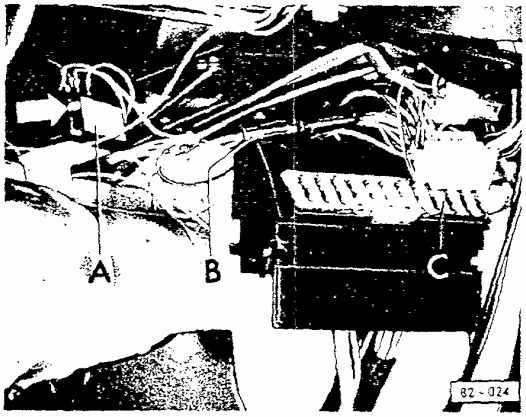

Fig. 22 Safety switch/main fuse/fuse box, location

A - safety switch (arrow)
B - inline fuse - 16 amps
C - fuse No.10 in fuse box - 16 amps

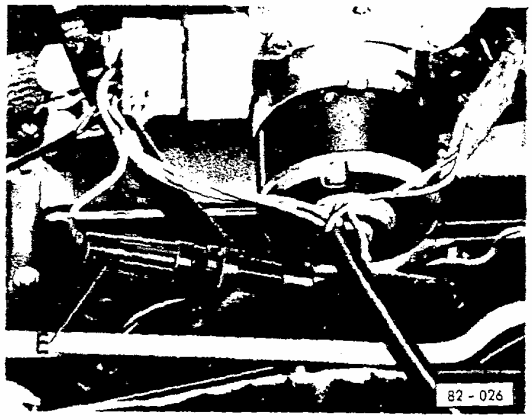

Fig. 24 Heater air blower fuse, location

E - inline fuse - 16 amps

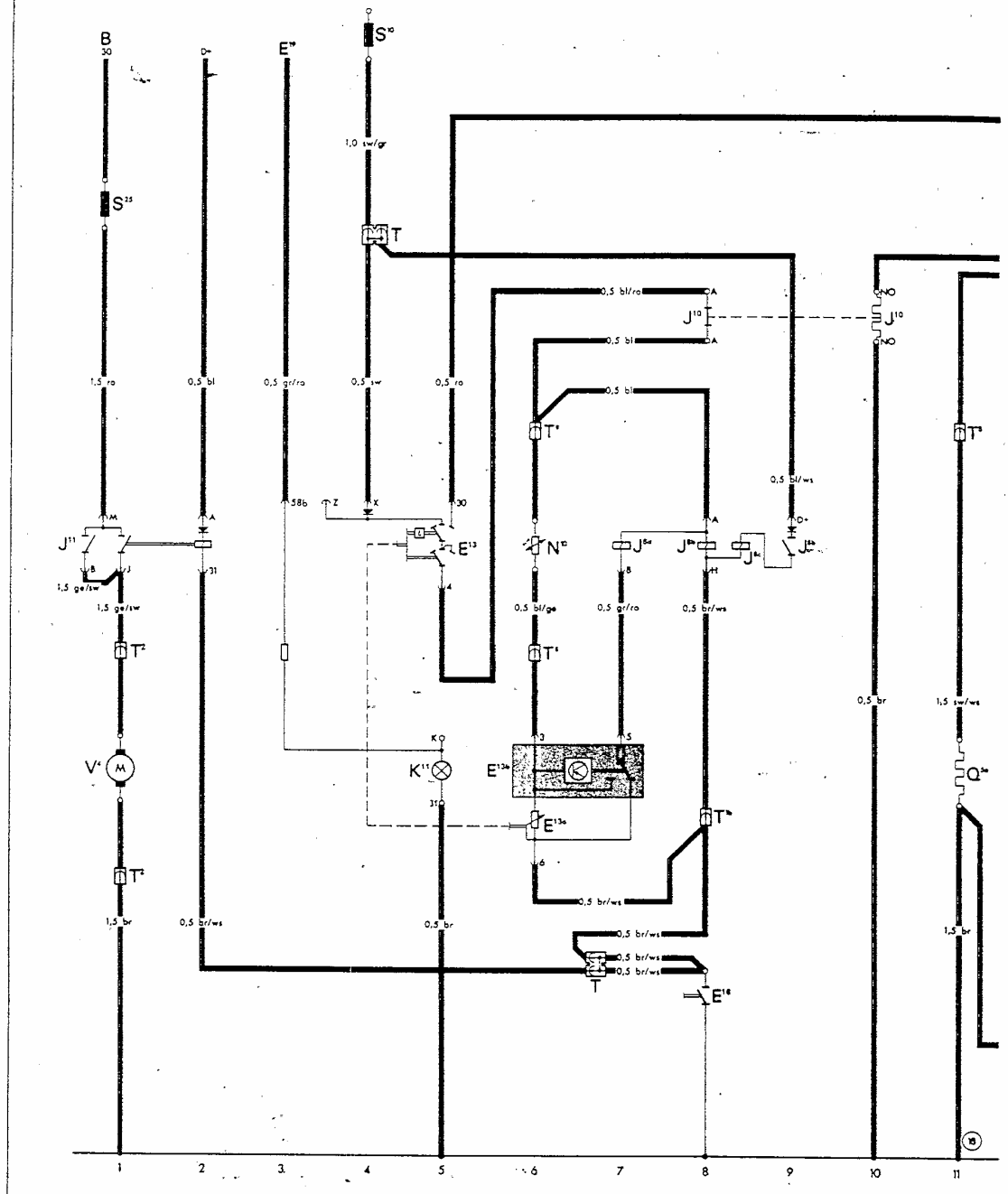

Current flow diagram

Heater booster BA 6

10

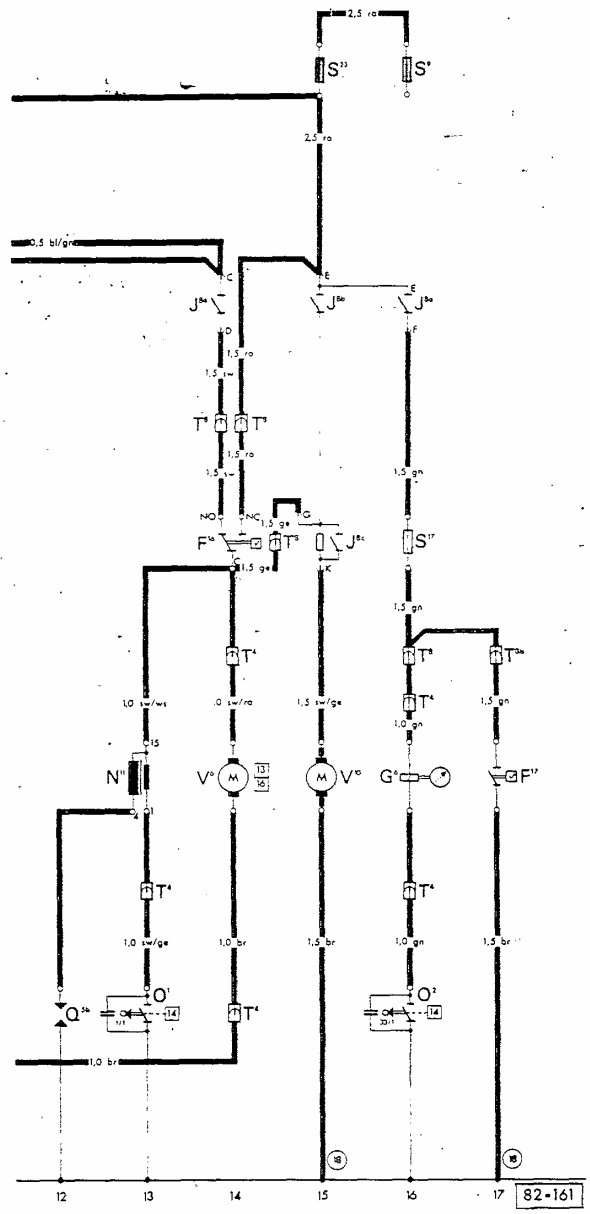

Description	current track
B – to starter terminal 30	1
D+ – to voltage regulator	2
E1a – Terminal 58b remains vacant	3
E13 – Temperature regulating switch (switch part)	5
E13a – Temperature regulating switch (regulating part)	6
E13b – Temperature regulating switch (electronic circuit)	6,7
E16 – Main switch	8
F16 – Flame switch	14
F17 – Overheating switch	17
G6 – Fuel pump	16
J8a – Relay	7,14,16
J8b – Relay	8,9,15
J8c – Relay	8,15
J10 – Safety switch	8,10
J11 – Relay for heater air blower	1,2
K11 – Warning light	5
N10 – Temperature sensor	6
N11 – Ignition coil	13
O1 – Breaker contact in combustion air blower for ignition coil	13
O2 – Breaker contact in combustion air blower for fuel pump	16
Q5a – Glow spark plug – Glow element	11
Q5b – Glow spark plug – Electrode	12
S9 – Fuse No. 9 in fuse box	16
S10 – Fuse No. 10 in fuse box	4
S17 – Overheating fuse – 8 amps (separate fuse)	16
S23 – Main fuse – 16 amps (separate fuse)	15
S25 – Fuse – 16 amps for heater air blower	1
T – Wire connector (under dashboard)	4,7
T1b – Wire connector, single (under dashboard)	8
T2 – Wire connector, double (on heater air blower	1
T4 – Connector on combustion air blower	13,14,16
T8 – Connector, 8 point	6,11,14,16
V4 – Heater air blower	1
V6 – Combustion air blower	14
V10 – Air circulation blower	15
(18) – Heater ground on coil bracket	11,15,17

Color code
bl = blue
br = brown
ge = yellow
gn = green
gr = gray
ro = red
sw = black
ws = white

11

Heater operation sequence:

- turn heater on
- heater start-up
- heating
- temperature regulation
- overheating switch
- safety switch
- turn heater off
- heater run-on

Turn heater on

a – Start vehicle engine and run it at 2000 rpm

check for voltage at:
terminal D+ on regulator
relay for heater air blower (J 11) activates
heater air blower (V 4), starts to deliver air

b – Press main switch lever (E 16) down fully. Control flaps are opened. Engine heating starts

c – Turn on temperature regulating switch (E 13) and set heat. Warning light (K 11) lights up and heater starts operating

Heater start up

Heater ignites within 70 seconds if air drawn in is at room temperature.
Start-up process is terminated by flame switch (F 16)

check for voltages at:
terminal 30 and 4 of temperature regulation switch (E 13)
terminals A–A of safety switch (J 10)
relay (J 8) operates contacts E–G and E–K
terminals of fuse (S 23) 16 amp
terminals E–K of relay (J 8b)
air circulation blower (V 10) starts operating
series resistance for air circulation blower (V 10) in relay reduces output when there is no voltage at terminal D+ on relay. This is the case when engine is running (voltage at terminal X on temperature regulating switch). Resistance in relay is bridged by relay contact (J 8 c) when there is voltage at terminal D+ on relay
terminal C of flame switch (F 16)
combustion air blower (V 6) starts operating
terminal 15 of ignition coil (N 11)
at every revolution of combustion air blower (V 6) ignition coil (N 11) receives an impulse via breaker contacts (O 1)

check for no or low voltage at:
main switch (E 16)
terminals 6–5 of temperature regulating switch (E 13b) – about 3 volts
terminal B of relay (J 8a) – about 3 volts
relay (J 8a) operates contacts E–F and C–D

12

check for voltage at:
terminal NO of flame switch (F 16)
glow element of glow/spark plug (Q 5a) is energized. It warms fuel/air mixture to make it readily combustible. It is then ignited by sparks from glow/spark plug (Q 5b)
overheating fuse (S 17) 8 amps
fuel pump (G 6) starts to deliver fuel. At every 33 rd revolution of combustion air blower (V 6) fuel pump (G 6) receives an impulse via breaker contacts (O 2)

Heating

When heater has ignited and warmed up, flame switch (F 16) operates contact C-NC. This ends start-up process

following are de-energized:
terminal NO of flame switch (F 16)
glow element of glow/spark plug (Q 5a) is de-energized
safety switch (J 10) is out of action

Temperature regulation

During regulation there are two voltages at terminal 5 of temperature regulating switch (E 13b). These voltages are controlled by temperature selection via electronic circuitry (E 13b) and temperature sensor (N 10). When heater reaches high heat output, temperature sensor (N 10) records a high temperature and temperature regulating switch (E 13b) indicates a high voltage at terminal 5 as switching value for relay (J 8a)

check for voltage at:
contact 5 of temperature regulating switch (E 13b)
contact B of relay (J 8a)
relay separates contacts E-F and D-C
following are de-energized:
contact F of relay (J 8a)
contacts of fuse (S 17)
fuel pump stops delivering fuel and combustion stops as heat exchanger cools down. Before flame switch sensor tube can cool off sufficiently to close contacts C-NO (less than 2 minutes) temperature sensor (N 10) registers lowered temperature and switches on heater
check for no or low voltage at:
contact 5 of temperature regulating switch (E 13b) - about 3 volts
contact B of relay (J 8a) - about 3 volts
relay (J 8a) connects contacts E-F and D-C
check for voltage at:
terminal F of relay (J 8a)
fuel pump (G 6) starts delivering fuel

13

Overheating switch

If heater should overheat, overheating switch (F 17) closes and causes a short circuit which blows 8 amp fuse (S 17).
Overheating switch (F 17) operates if insufficient air is flowing past heat exchanger or temperature regulating switch (E 13b) does not regulate

this de-energizes:
terminal of fuel pump (G 8)
flame goes out and run-on starts

Safety switch

Safety switch (J 10) operates when flame switch (F 16) holds contacts C-NO longer than approximately two to four minutes (because combustion has not taken place in heater), re-ignition has not taken place after regulation, or because flame switch (F 16) is defective.

check for voltage at:
terminals C-NO of flame switch (F 16)
terminals D-C of relay (J 8a)
glow element of safety switch (J 10) heats up for about two to four minutes and contact connection A-A is interrupted
following are de-energized:
terminal A of relay (J 8)
all connections in relay (J 8) are interrupted
terminal G of relay (J 8)
terminal K of relay (J 8)
combustion air blower (V 6) stops
ignition coil (N 11) is de-energized
air circulation blower (V 10) stops
terminal F to relay (J 8)
fuel pump (G 6) stops working

Turning heater off

Turn knob of temperature regulating switch (E 13) back to stop position. Press main switch (E 16) up to open ground contact

following is de-energized:
terminal (4) on temperature regulating switch (E 13b)
terminal A on relay (J 8)
all connections in relay (J 8) are interrupted

14

Heater run-on

Run-on lasts for about 80-160 seconds at an ambient temperature of 20 C (68 F) and is shorter at lower temperatures. Run-on is necessary in order to clear all traces of gas from the heat exchanger and cool it down. Flame switch limits run-on period

following is de-energized:
- terminal F of relay (J 8a)
  - fuel pump (G 6) stops working

check for voltage at:
- terminals of fuse (S 23) 16 amps
- terminals NC-C of flame switch (F 16)
  - combustion air blower (V 6) delivers air
- terminal G of relay (J 8)
- terminal K of relay (J 8)
  - air circulation blower (V 10) delivers air.
  - When heat exchanger has cooled down, flame switch (F 16) operates contacts C-NO

following are de-energized:
- terminal C of flame switch (F 16)
- terminal K of relay (J 8c)
  - air circulation blower (V 10) and combustion air blower (V 6) are de-energized and run-on is finished

15

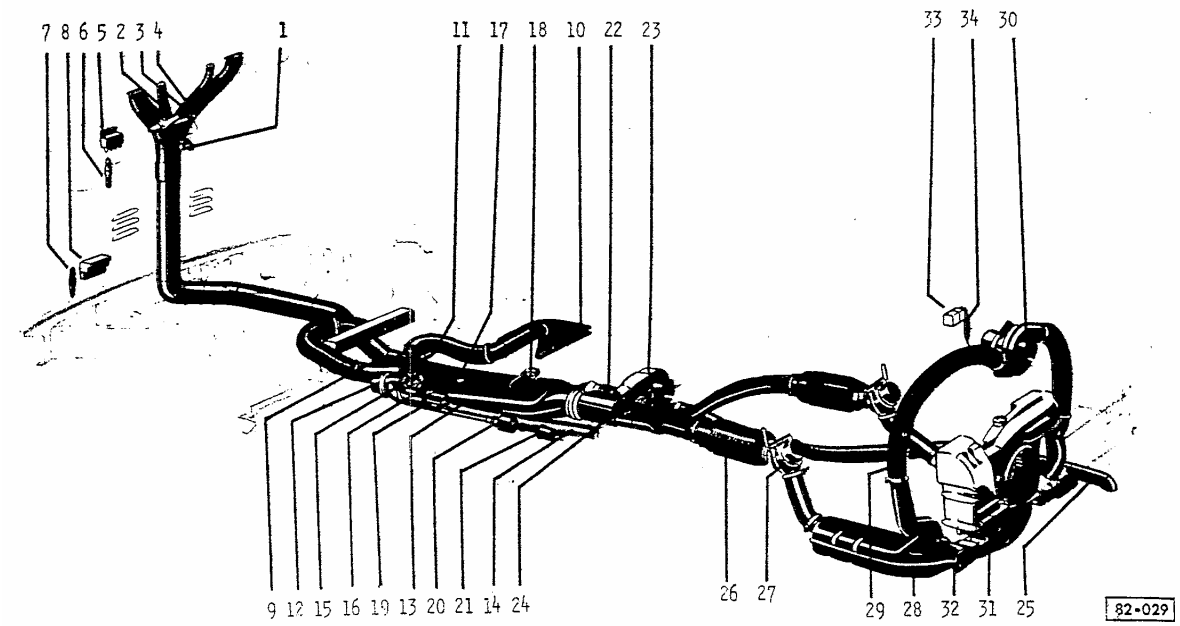

Trouble	Operating conditions
10th fuse in fuse box blown	Engine running; main switch on (lever 3) Temperature regulating switch (1) on
Separate 16 Amp. fuse for heater air blower (34) blown	Main switch on (lever 3); engine running
Main fuse (6) blown	Main switch on (lever 3) Temperature regulating switch (1) on
Safety switch (5) activated	Main switch on (lever 3) Temperature regulating switch (1) on
Overheating switch (17) and 8 Amp. fuse have operated	Main switch on (lever 3) Temperature regulating switch (1) on
Heater does not run-on	Heater and engine turned off
Air circulation blower does not run at two speeds	Main switch on(lever 3);temperature regulating switch (1) on; ignition turned on and off
Heat output inadequate and/or heater uses too much fuel	Engine running; heater turned on
Air circulation (23) and combustion air blower (12) continue to run after run-on period although heater is turned off	Engine running; main switch on (lever 3) Temperature regulating switch (1) just turned off
Heater air blower (3) continues to run	Heater and engine just turned off
Heater smokes	Main switch on (lever 3) Temperature regulating switch (1) on

Symbols denote degree of trouble probability

○ = Highly probable
△ = Not so probable
□ = Seldom

											Trouble caused by	see page
						○	▷			○	1 – Temperature regulating switch	2,6
			○								3 – Lever for flaps and ground (main switch)	2
							□				5 – Safety switch	2,8
								○			6 – Main fuse (16 amp)	2,9
						○	○				7 – Overheating fuse (8 amp)	3,9,18
		▷		○		□	□	□		▷	8 – Heater relay	2
						□					9 – Warm air distributor blocked	2
						□	□				10 – Warm air vent blocked	2
						▷	□				11 – Temperature sensor	2,7
▷							▷	○			12 – Combustion air blower	2,4
							▷				13 – Heater housing	2,4
							▷				14 – Combustion air hose	2,5
							○	○			15 – Glow/spark plug	2,5
							○				16 – Fuel connection	2,4
						▷	▷	▷			17 – Overheating switch	2,5
		○			○		▷				18 – Flame switch	2,6
							□	□			19 – Coil	2,7,8
○						□	▷	□			20 – Fuel pump	2,7
							○				21 – Filter	2
							○				22 – Exhaust pipe adapter	2,4
						▷	□	▷			23 – Air circulation blower	3,8
						▷	□				24 – Flap housing	3,18
○							○				25 – Exhaust pipe	3
			○								26 – Warm air hose	3
			○								27 – Control flap	3,18
			▷								28 – Heat exchanger	3,18
			▷								29 – Heater air hose	3
			▷							○	30 – Heater air blower	3,18
			▷								32 – Non-return flaps	3,18
	○		□							□	33 – Relay for heater air blower	3
			○							○	34 – Fuse for heater air blower	3,9

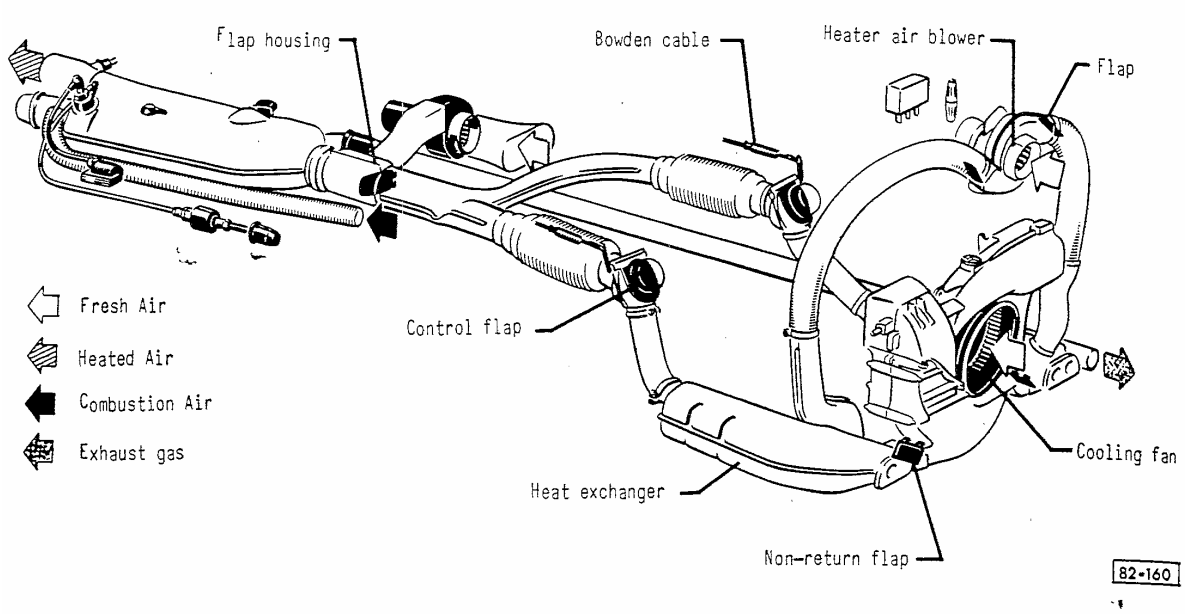

Complaint	Check for	Possible cause	Correction
Excessive fuel consumption (heater makes up for lack of heat from engine)	Air from heater air blower escaping through cooling fan duct (engine idling)	Engine fan flaps do not close	Replace cooling fan non-return flaps
	Air from cooling fan escaping through heater air blower	Heater air blower flaps broken	Replace housing and flaps for heater air blower
	Warm air escaping through control flaps	Control flap cables not adjusted	Adjust control flap cables
	Warm air escaping	Heat exhangers rusted	Replace heat exchangers
Overheating fuse (8 amp) blows	Lack of warm air (when vehicle engine is not running)	Flap in housing stops air flow from air circulation blower	Replace flap housing

BA 6 Heater for Type 2
(from August 1973)

Description

The BA 6 heater is installed in the space between the floor plates and the underfloor plates. It is connected to the heater ducts of the normal engine heating system.

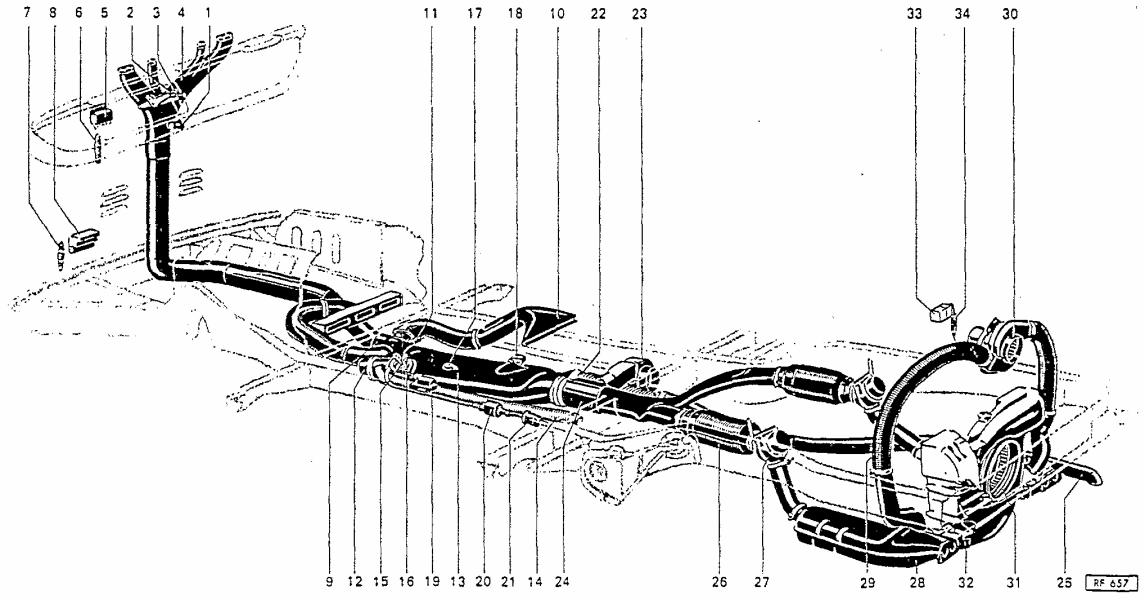

1 – Temperature regulating switch
2 – Warm air distribution lever
3 – Lever for heater flaps and main switch
4 – Fresh air distribution lever
5 – Safety switch
6 – Main fuse (16 Amp.)
7 – Overheating switch (8 Amp.)
8 – Relay
9 – Warm air distributor
10 – Heater outlet
11 – Temperature sensor
12 – Combustion air blower
13 – Heater
14 – Combustion air hose
15 – Glow-spark plug
16 – Fuel connection
17 – Overheating switch
18 – Thermoswitch
19 – Coil
20 – Metering pump
21 – Filter
22 – Injector
23 – Air circulation blower
24 – Flap housing
25 – Exhaust pipe
26 – Warm air hose
27 – Warm air flap
28 – Heat exchanger
29 – Warm air hose*)
30 – Warm air blower*)
31 – Cooling air fan*)
32 – Non-return flap*)
33 – Warm air blower relay
34 – Separate fuse for warm air blower

*) not installed in Type 2/1600

F 9 Supplement Printed in Germany 10. 73

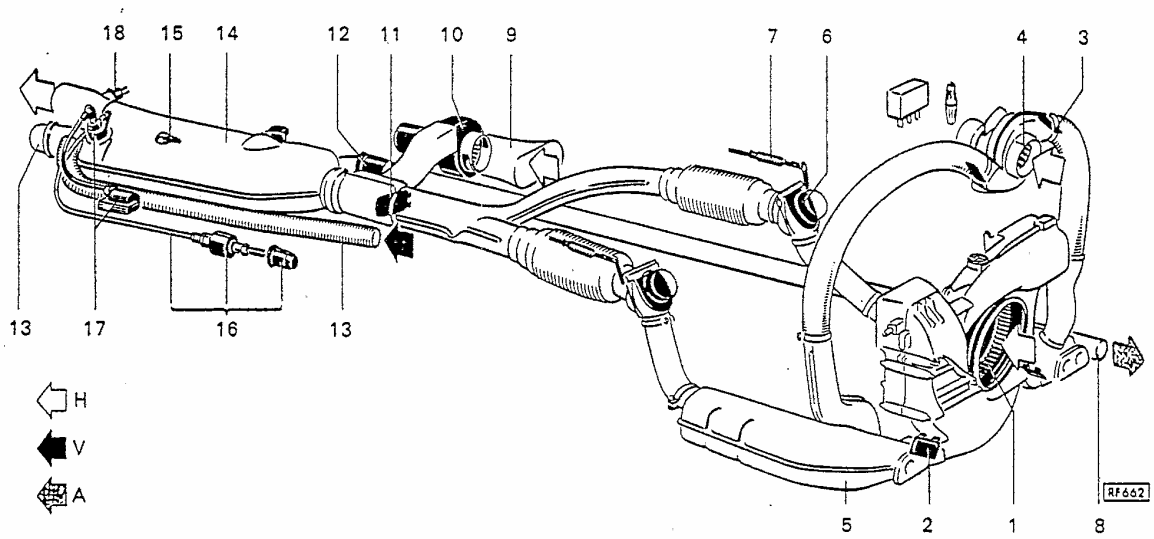

H – Warm air V – Combustion air A – Exhaust

ing air fan (1)

Delivers warm air to the heating system dependent on the speed of the engine.

m air blower (4)

Forces warm air through heat exchanger (5) towards BA 6 heater when the speed of the cooling air fan (1) is low.

: exchanger (5)

m air control flaps (6)

ıust pipe (8) and injector (12)

Conducts exhaust gas away with minimum drop in pressure.

:irculation blower (10)

Forces air through the heater (14) vehicle engine is not running. When engine is running at high speeds, the blower also runs but does not deliver air.

housing (11)

The flap closes the air duct from the air circulation blower (10) to the heater (14) when the percentage of air from the engine heating is higher (when engine is running fast).

The flap closes the air duct from the engine heating to the heater (14) when the engine is not running.

Combustion air system (13)

(consists of flexible hose and blower)

The combustion air blower draws air from the hollow cross member and delivers it to the heater combustion chamber where it mixes with the fuel.

BA 6 heater (14)

Supplements the warm air supply to the passenger compartment according to the heat output from the engine heating system.

Fuel system (16)

(consists of filter and metering pump)

Supplies fuel to the heater combustion chamber in conjunction with the air being delivered by the combustion air blower.

Ignition system (17)

(consists of glow-spark plug and coil)

Regulation system (18)

(consists of temperature sensor (18) and temperature regulating switch).

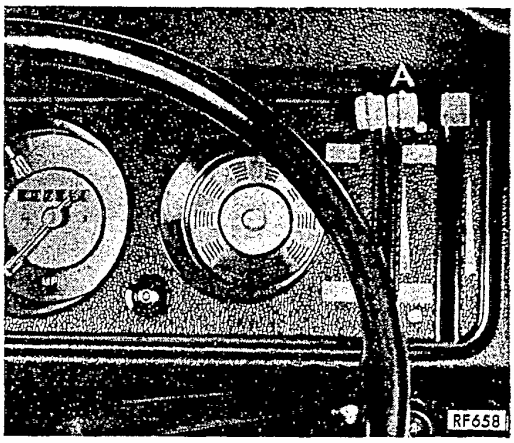

Operation

Switching BA 6 heater on

a – Press engine heating lever (A) down fully.
(This operates the main switch to complete regulation circuit and opens the air flaps.)

b – Press temperature regulating switch in and turn it 90° clockwise.
(Mechanism in switch limits heater running time to about 10 minutes.)

c – Turn switch to the right to set amount of heat required.

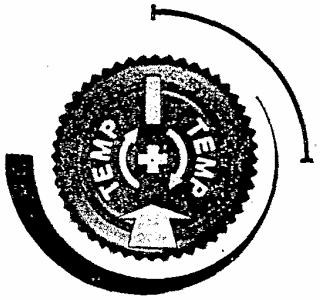

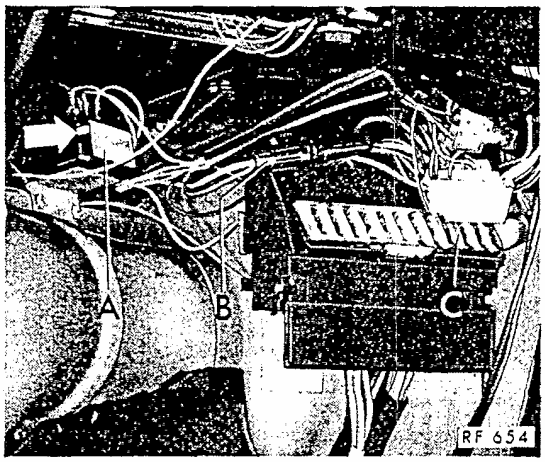

Safety devices

1 – Safety switch (A)

The switch operates when the heater fails to ignite properly or there is no fuel (Press switch lever in direction shown by arrow).

2 – Main fuse (B) – 16 Amp. –

(Separate fuse with red wires)
is for:

Combustion air blower
Air circulation blower
Metering pump
Ignition
Control current circuit
when engine is not running

3 – Fuse (C) – 16 Amp. –

This is the 10th fuse in the fuse box.
It is for the control current circuit when heater is on and vehicle is moving.

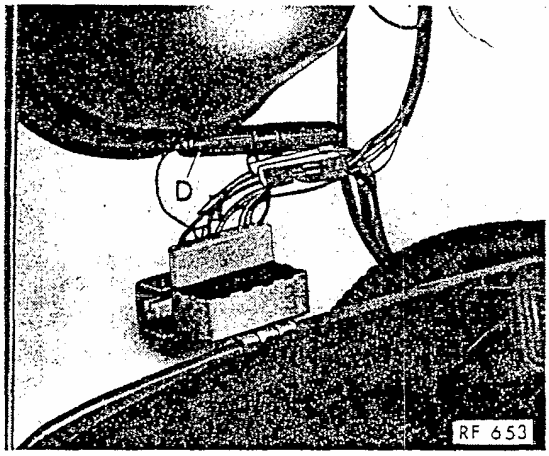

4 – Overheating fuse (D) – 8 Amp. –

(Separate fuse with green wires)
Operates when heat exchanger overheats because:

a – No air is flowing through the heat exchanger.

b – The temperature regulating switch has failed.

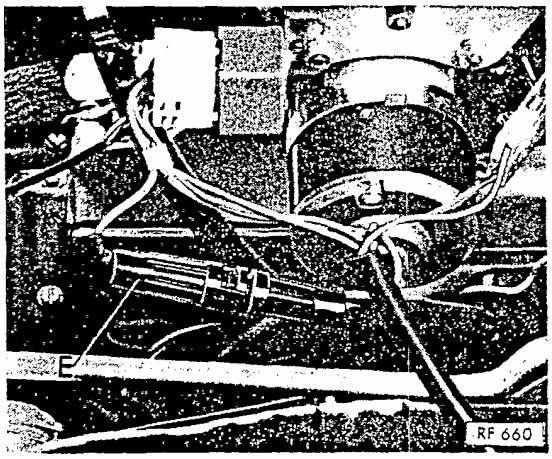

5 – Fuse (E) – 16 Amp. –

This fuse is for the warm air blower.

(not installed in Type 2/1600)

Maintenance

Every two years the following maintenance operation should be carried out on the heater:

1 – Clean filter if water can be seen in it.

2 – Check glow-spark plug:

a – Clean if very sooty

b – Check electrode gaps

c – Check internal resistance of spark plug part

Fit a new plug if necessary.

3 – Clean strainer in plug connection:

Loosen the carbon deposits with a tooth brush and then blow it off with compressed air (repeat).

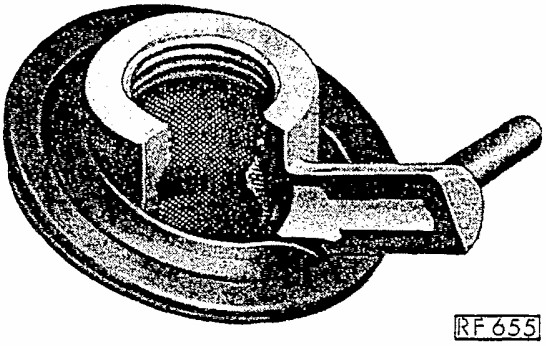

If this is not done, trouble will be experienced with heater ignition during start-up and regulation and this will in turn cause the safety switch to operate at irregular intervals.

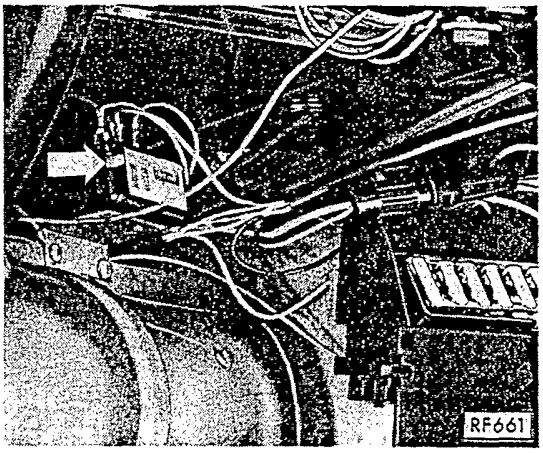

Safety switch

Technical data

Heat output	
of BA 6 heater at maximum temperature setting	approx. 5100 kcal/h to 5900 kcal/h
Heat output	
of engine heating with engine at maximum speed	approx. 12,500 kcal/h
Fuel	vehicle fuel
Fuel consumption	
at maximum temperature	approx. 1.1 liter/h to 1.3 liter/h
Operating range	10–14 volts
at an ambient temperature of	—40 °C to 20 °C
Nominal voltage	12 volts

Current draw in various conditions		Type 2/1600 in watts	Type 2/1800 in watts
Current draw when vehicle is in motion during start-up with engine running fast	approx.	240	300
during start-up with engine running slowly	approx.	255	400
when heating with engine running fast	approx.	100	160
when heating with engine running slowly	approx.	215	260
Current draw when engine is not running, during start-up	approx.	240	240
When heating	approx.	100	100

CO content in exhaust gas over entire operating range (except start-up)	less than 0.2 % of volume
Start-up time (glow time of glow-spark plug)	less than 70 seconds
Run-on time	approx. 80 to 160 seconds

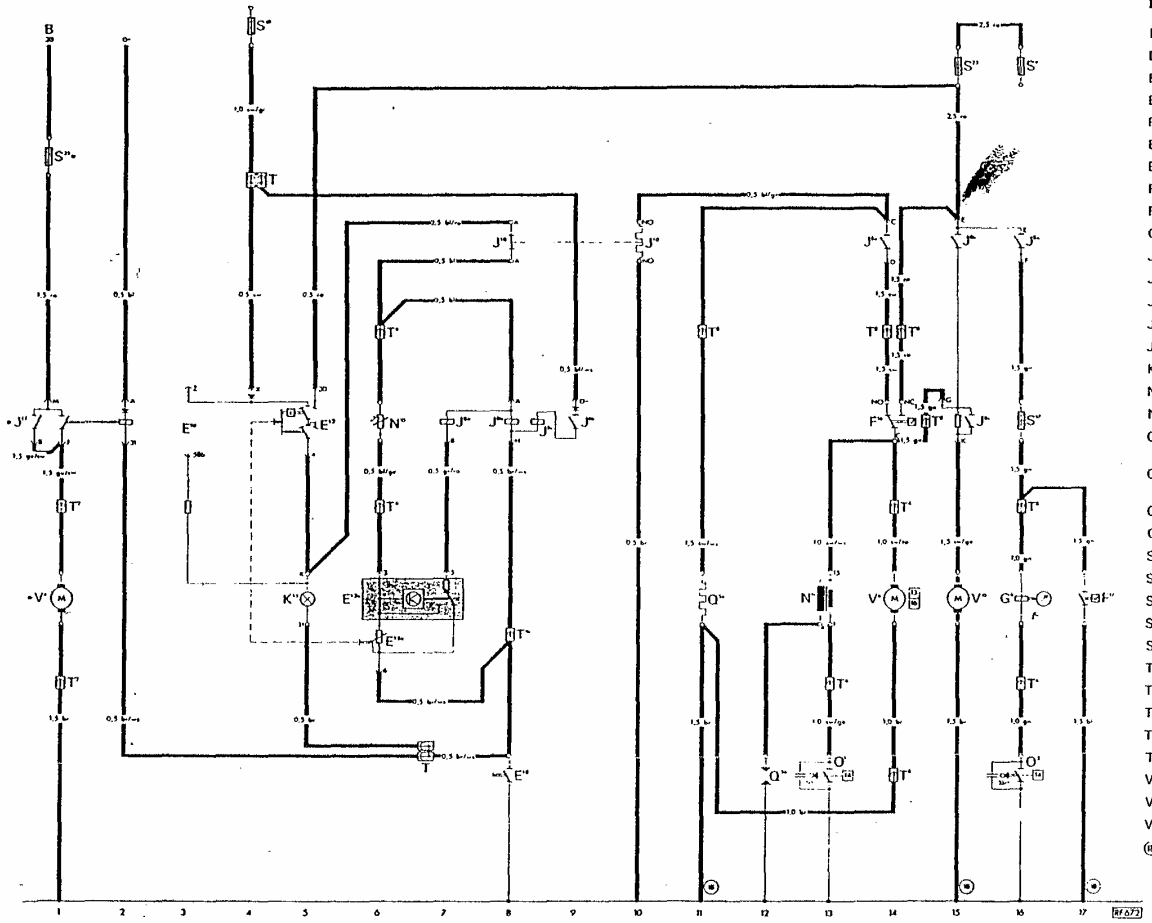

Designation	In current track
B* – to starter terminal 30	1
D+ – to voltage regulator	2
E[1a] – terminal 58 b vacant	3
E[13] – Temperature regulating switch (switch part)	5
F[13a] – Temperature regulating switch (regulating part)	6
E[13b] – Temperature regulating switch (electronic)	6, 7
E[16] – Main switch	8
F[16] – Thermoswitch	14
F[17] – Overheating switch	17
G[6] – Metering pump	16
J[8a] – Relay	7, 14, 16
J[8b] – Relay	8, 9, 15
J[8c] – Relay	8, 15
J[10] – Safety switch	8, 10
J[11]* – Relay – Warm air blower	1, 2
K[11] – Warning lamp	5
N[10] – Temperature sensor	6
N[11] – Coil	13
O[1] – Contact for coil in combustion air blower (one impulse per revolution)	13
O[2] – Contact for metering pump in combustion air blower (one impulse every 33 revolutions)	16
O[5a] – Glow-spark plug – Glow element	11
O[5b] – Glow-spark plug – Electrodes	12
Sa – Ninth fuse in fuse box	16
S[10] – Tenth fuse in fuse box	4
S[17] – Overheating fuse – 8 Amp. (separate)	16
S[23] – Main fuse – 16 Amp. (separate)	15
S[25]* – Fuse – 16 Amp. – for warm air blower	1
T – Cable adaptor (on instrument panel)	4
T[1b] – Cable connector, single (on instrument panel)	8
T[2] – Cable connector, double on warm air blower	1
T[4] – Cable connector on combustion air blower	13, 14, 16
T[8] – Cable connector 8 pin (on water container bracket)	5, 6, 11, 14, 16
V[4]* – Warm air blower	1
V[6] – Combustion air blower	14
V[10] – Air circulation blower	15
(⊕) – Heater earthing screw on coil bracket	

On vehicles with Canadian equipment the lamp (K 11) in the knob of the temperature regulating switch (E 13) is wired as an illuminating lamp:

Terminal 58 b of temperature regulating switch E 13 is connected to terminal 58 b on lighting switch.

Terminal K of temperature regulating switch remains vacant.

Terminal 4 of temperature regulating switch is connected to terminal A of safety switch.

Terminal 31 of temperature regulating switch is connected directly to earth.

ro = red
sw = black
ge = yellow
bl = blue
br = brown
ws = white
gn = green
gr = gray

* not installed on Type 2/1600

Explanation

To switch heater on:

Testing should always be carried out with the engine running at a fast idle.

a – Start vehicle engine

Voltage can be measured at:

Terminal D+ on regulator

Relay for warm air blower (J 11) operates.
The warm air blower (V 4) starts to deliver.

b – Press main switch lever (E 16) down fully. Heater flaps are opened. Engine heating starts to work.

c – Switch on temperature regulating switch (E 13) and set heat. The warning lamp (K 11) lights up and heater booster starts to heat.

Start-up:

The heater ignites within 70 seconds if the air drawn in is at room temperature.
The start-up process is terminated by the thermo-switch (F 16).

Voltage can be measured at:

Terminals 30–4 of temperature regulation switch (E 13)
Terminals A–A of safety switch (J 10)

Relay (J 8) operates contacts E–G and E–K.

Terminals of fuse (S 23) 16 amp.
Terminals E–K of relay (J 8b)

The air circulating blower (V 10) starts to work.
The series resistance for the air circulating blower (V 10) in relay reduces the output when there is no voltage at terminal D+ on relay. This is the case when the engine is running (voltage at terminal X on temperature regulating switch).
The resistance in relay is bridged by relay contact (J 8c) when there is no voltage at terminal D+ on relay.

Terminal C of thermo-switch (F 16)

The combustion air blower (V 6) starts to work.

Terminal 15 of ignition coil (N 11)

At every revolution of the combustion air blower (V 6) the ignition coil (N 11) receives an impulse via the breaker contacts (O 1).

No voltage or a low voltage can be measured at:

Main switch (E 16)
Terminals 6–5 of temperature regulating switch (E 13b)
– about 3 volts –
Terminal B of relay (J 8a)
– about 3 volts –

Relay (J 8a) operates the contacts E–F and C–D.

Voltage can be measured at:

Terminal NO of thermo-switch (F 16)

The glow element of the glow-spark plug (Q 5 a) is energized. It warms the fuel-air mixture to make it readily combustible. It is then ignited by the sparks from the glow-spark plug (Q 5 b).

Overheating fuse (S 17) 8 amps

The fuel pump (G 6) starts to deliver fuel. At every 33rd revolution of the combustion air blower (V 6) the fuel pump (G 6) receives an impulse via the contact breaker (O 2).

leating

Vhen the heater has ignited and warmed up, the thermo-switch (F 16) operates the contacts :–NC. This ends the start-up process.

The following are de-energized:

Terminal NO of thermo-switch (F 16)

The glow element of the glow-spark plug (Q 5 a) is de-energized.
The safety switch (J 10) is out of action.

legulation

uring regulation there are two voltages at terminal 5 of the temperature regulating switch (E 13 b). hese voltages are controlled by the temperature selection via the electronic circuitry (E 13 b) nd the temperature sensor (N 10). When the heater reaches the high heat output, the tempera- ure sensor (N 10) records a high temperature and the temperature regulating switch (E 13 b) ndicates a high voltage at terminal 5 as the switching value for the relay (J 8 a).

Voltage can be measured at:

Contact 5 of temperature regulating switch (E 13 b)
Contact B of relay (J 8 a)

The relay separates the contacts E–F and D–C.

The following are de-energized:

Contact F of relay (J 8 a)
Contacts of fuse (S 17)

The fuel pump stops delivering fuel and the heat exchanger cools down. The temperature of the warm air also drops. The heat exchanger however, cools down so far during the regulating process that the thermo-switch can operate contacts C–NO for less than two minutes because the temperature sensor (N 10) registers the low temperature necessary for the switch-on process beforehand. Contact 5 on the temperature regulating switch (E 13 b) receives a low voltage as switching current for the relay (J 8 a). Due to the internal resistance of the electronic circuitry (E 13 b) terminal 5 cannot reach the ground potential.

No voltage or a low voltage can be measured at:

Contact 5 of temperature regulating switch (E 13 b)
– about 3 volts –
Contact B of relay (J 8 a)
– about 3 volts –

Relay (J 8a) connects the contacts E–F and D–C.

Voltage can be measured at:

Terminal F of relay (J 8a)

The fuel pump (G 6) starts delivering fuel.

Operation of overheating circuit

If the heater should overheat, the overheating switch (F 17) closes and causes a short circuit which blows the 8 amp fuse (S 17).
The overheating switch (F 17) responds if insufficient warm air is flowing past the heat exchanger or the temperature regulating switch (E 13b) does not regulate.

This de-energizes:

Terminal of fuel pump (G 6)

The flame goes out and the run-on starts.

Operation of safety switch

The safety switch (J 10) responds when the thermo-switch (F 16) holds the contacts C–NO for longer than roughly two to four minutes because combustion has not taken place in the heater, re-ignition has not taken place after regulation, or because the thermo-switch (F 16) is defective.

Voltage can be measured at:

Terminals C–NO of thermo-switch (F 16)
Terminals D–C of relay (J 8a)

The glow element of safety switch (J 10) heats up for about two to four minutes and then the contact connection A–A is interrupted.

The following are de-energized:

Terminal A of relay (J 8)

All connections in relay (J 8) are interrupted.

Terminal G of relay (J 8)
Terminal K of relay (J 8)

The combustion air blower (V 6) stops.
The ignition coil (N 11) is de-energized.
The air circulation blower (V 10) stops.

Terminal F of relay (J 8)

The fuel pump (G 6) stops working.

Switching heater off:

Turn knob of temperature regulating switch (E 13) back to the click stop position. The warning lamp (K 11) goes out. Press main switch (E 16) down to open earth contact.

The following is de-energized:

Terminal (4) on temperature regulating switch (E 13b)
Terminal A on relay (J 8)

All connections in relay (J 8) are interrupted.

Run-on:

The run-on lasts for about 80–160 seconds at an ambient temperature of 20 °C and is shorter at lower temperatures. The run-on is necessary in order to clear all traces of gas from the heat exchanger and cool it down. The thermo-switch limits the run-on period.

The following is de-energized:

Terminal F of relay (J 8a)

The fuel pump (G 6) stops working.

Voltage can be measured at:

Terminals of fuse (S 23) 16 amps
Terminals NC–C of thermo-switch (F 16)

The combustion air blower (V 6) delivers air.

Terminal G of relay (J 8)
Terminal K of relay (J 8)

The air circulation blower (V 10) delivers air.

When the heat exchanger has cooled down,
the thermo-switch (F 16) operates contacts C–NO.

The following is de-energized:

Terminal C of thermo-switch (F 16)
Terminal K of relay (J 8)

Air circulation blower (V 10) and combustion air blower (V 6) are de-energized and the run-on is finished.

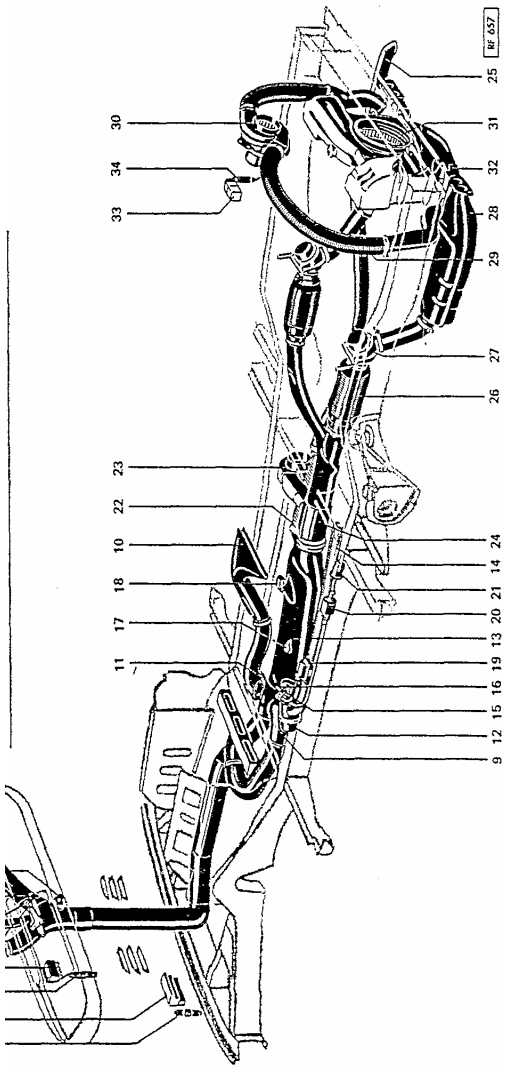

Fault finding chart

Fault	Conditions	1 – Temperature regulating switch	3 – Lever for flaps and earth (main switch)	5 – Safety switch	6 – Main fuse	7 – Overheating fuse	8 – Heater relay	9 – Warm air distributor blocked	10 – Warm air vent blocked	11 – Temperature sensor	12 – Combustion air blower	13 – Heater	14 – Combustion air hose	15 – Glow-spark plug	16 – Fuel connection	17 – Overheating switch	18 – Thermoswitch	19 – Coil	20 – Metering pump	21 – Filter	22 – Injector	23 – Air circulation	24 – Flap	25
10th fuse in fuse box blown	Engine running Main switch on (lever 3) Temperature regulating switch (1) on	●				●																		
Separate 16 Amp. fuse for warm air blower (34) blown	Main switch on (lever 3) Engine running																							
Main fuse (6) blown	Main switch on (lever 3) TRS (1) on		●			●				●			●					●						
Switch safety (5) has operated	Main switch on (lever 3) TRS (1) on			●		●	●	●	●	●	●	●	●	●		●	●	●	●	●	●	●		●
Overheating switch (17) and 8 Amp. fuse have operated	Main switch on (lever 3) TRS (1) on	●			●	●	●	●					●					●			●	●		
Heater does not run-on	Heater and engine switched off															●								
Air circulation blower (23) does not run at two speeds	Main switch on (lever 3) TRS (1) on Ignition switched on and off						●																	
Heat output inadequate and/or heater uses too much fuel	Engine running Heater switched on														●									
Air circulation (23) and combustion air blower (12) continue to run after run-on period although the heater is switched off	Engine running Main switch on (lever 3) TRS (1) has just been switched off						●									●								
Warm air blower (30) continues to run	Heater and engine have just been switched off																							
Heater smokes	Main switch on (lever 3) TRS (1) on																							●

Cause of trouble is:

Check as detailed on page F 6.3/1-3 F 6.3/2-2 F 6.1/2-2 F 6.1/2-2 F 6.3/2-2 F 6.3/1-4 F 6.3/1-2 F 6.3/1-2 F 6.3/2-2 F 6

g air fan (1)

e fault: Air flaps (2) not closing properly so that the blower (4) forces warm air out to atmosphere when engine is running slowly.

f fault: At low engine speeds, insufficient warm air passes through the heat exchanger (5) to the heater (14) and the heat radiating ability of the heat exchanger is not fully utilized. The heat then deficient in the passenger compartment is made up by the heater. This in turn causes the heater to use an excessive amount of fuel.

: Replace the flaps (2).

air blower (4)

e fault: Plastic flaps (3) broken.

f fault: At high engine speeds warm air flows from the cooling fan through the warm air blower to atmosphere.
Insufficient air passes through the heat exchanger (5) and the heat then deficient in the passenger compartment has to be supplied by the heater. This causes the heater to use too much fuel.

: Replace housing with flaps.

xchanger (5)

fault: Corrosion damage.

f fault: Loss of warm air, excessive high fuel consumption in heater.

: Replace heat exchanger (5).

l flaps (6)

fault: Flaps (6) not opening and closing simultaneously. Bowden cables (7) not properly adjusted.

f fault: Heat produced by engine is not fully utilized and heater has to supply heat unnecessarily (excessive fuel consumption). Or heater cannot be switched on at all because main switch circuit is not being closed.

: Adjust.

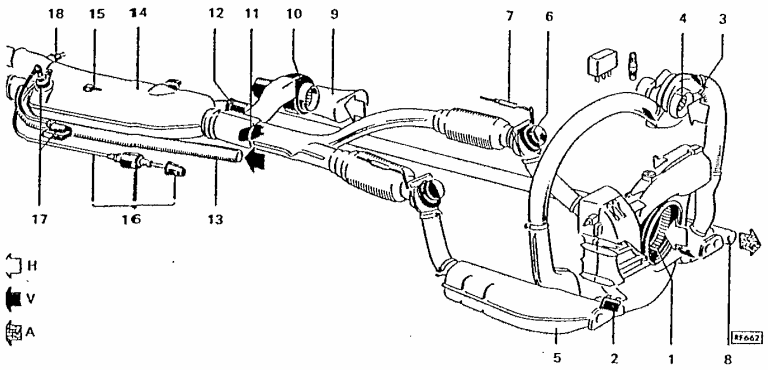

Exhaust pipe (8) and injector (12)

Possible fault: Blocked.

Effect of fault: 1 – Poor ignition.
2 – No ignition.
3 – Damage to combustion air blower.
Safety switch operates.

Remedy: Clean or replace.

Air circulation blower (10)

Possible fault: Electrical defect in motor (10).

Effect of fault: Overheating switch (15) operates when engine is not running, blows fuse.

Remedy: Check blower motor (F 6.3 / 2–1).

Flap housing (11)

Possible fault: Damaged by corrosion.

Effect of fault: Overheating switch (15) operates and fuse blows.

Remedy: Replace.

Combustion air supply (13)

Possible fault: Flexible hose fallen off at rear cross member.

Effect of fault: The difference in pressure caused by wind when vehicle is moving or side wind on the intake connection of blower alters the flame formation in heater. May even destroy the combustion air blower. The safety switch operates.

Remedy: a – Re-route hose (F 6.4 / 1–2).
b – Check combustion air blower F 6.3 / 1–2.

Heater (14):

Possible fault: see pages F 6.3 / 1–2.

Effect of fault: Safety switch operates.

Remedy: see page 6.3 / 1–2.

Fuel system (16)

Possible fault: see pages F 6.3 / 1–5.

Effect of fault: 1 – Safety switch operates.
2 – Heater smokes.

Remedy: see page F 6.3 / 1–5.

Ignition system (17)

(consists of glow-spark plug and coil)

Possible fault: see pages F 6.1 / 3–1 and F 6.3 / 2–2.

Effect of fault: Safety switch operates (see page F 6.2 / 1–1).

Remedy: see page F 6.1 / 3–1 and F 6.3 / 2–2.

Regulation (18)

(consists of temperature sensor (18) and temperature regulating switch)

Possible fault: see page F 6.3 / 1–3 and F 6.3 / 1–4.

Effect of fault: 1 – The overheating switch operates (see page F 6.2 / 1–1).
2 – The safety switch operates (see page F 6.2 / 1–1).

Remedy: see page F 6.3 / 1–3 and F 6.3 / 1–4.

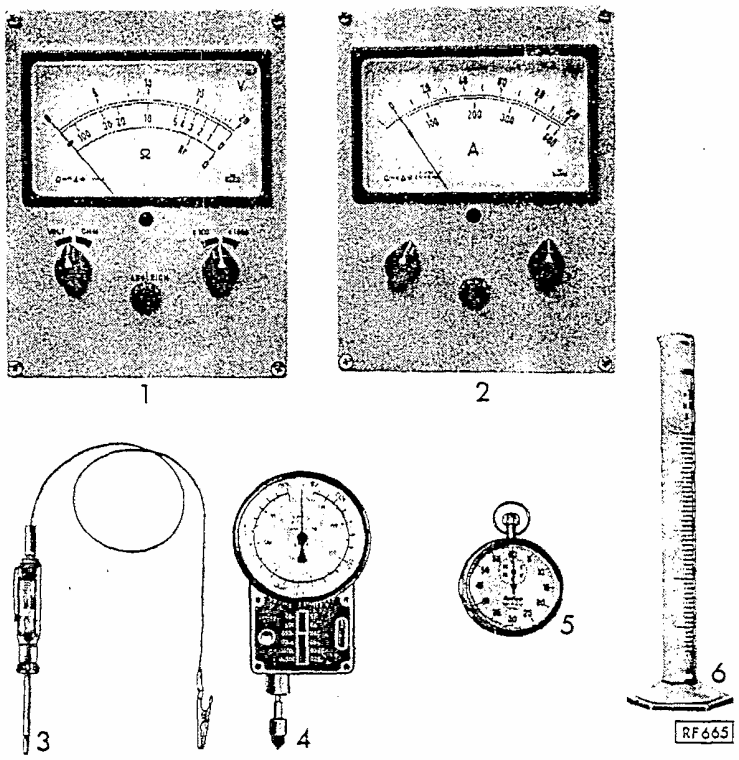

No.	Designation	Special Tool	Remarks
1	Ohmmeter/voltmeter		Range 0–20 V
2	Ammeter		Range 0–50 A
3	Test lamp		12 V
4	Rev. counter		0–8000 rpm
5	Stop watch		
6	Measuring glass		Capacity 25 cm^3
	Special spanner	674/2	Local manufacture

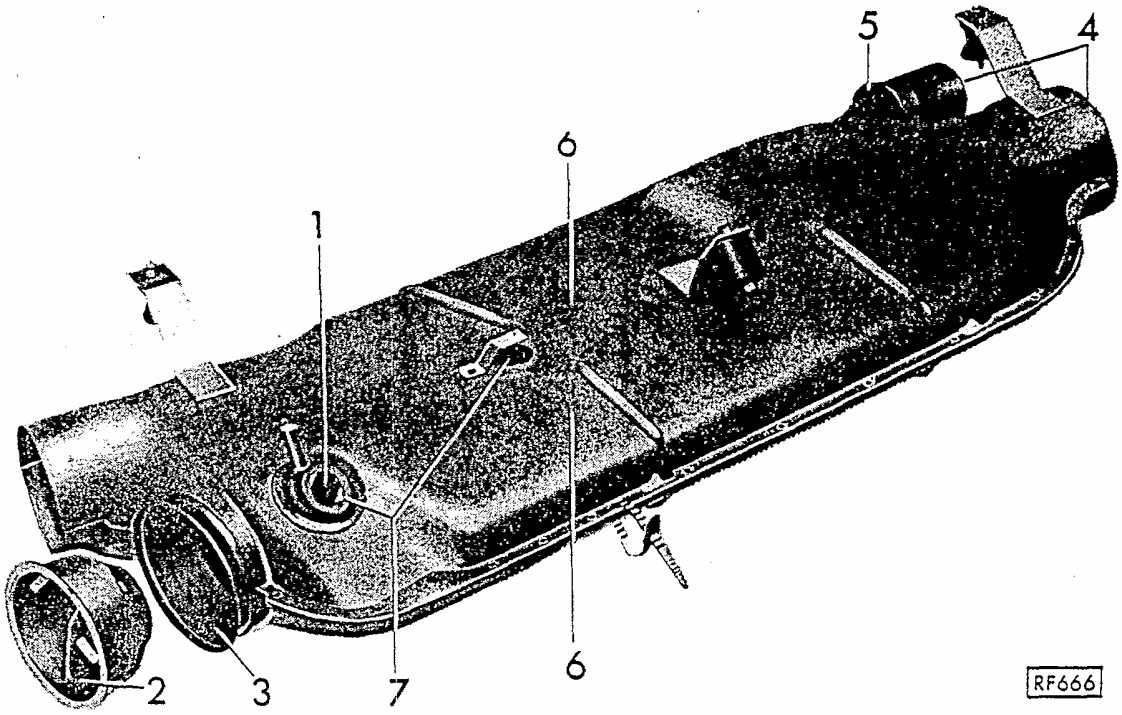

BA 6 Heater

Visual check:

1 Clean plug adaptor with toothbrush.

2 Replace deflector vane housing if burned.

3 Clean combustion chamber.

4 If tar-like deposits have formed in exhaust pipe, replace. Do not attempt to burn heater out.

5 Clean injector.

6 If heater casing is distorted due to overheating – replace it.

7 If gaskets are damaged due to overheating or are not correctly located – replace them.

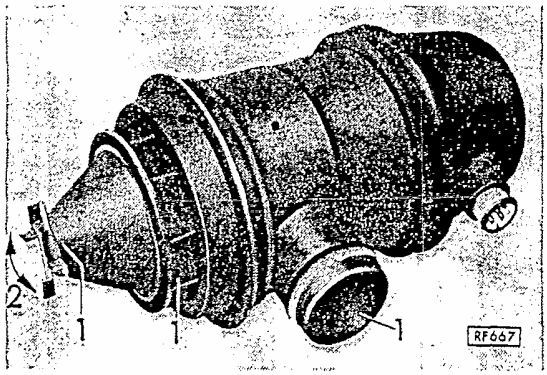

Combustion air blower

Visual check:

1 If blower is damaged due to heat – replace it.

2 Turn blades to check if bearings are in order. If not, replace blower as necessary.

Counting revolutions:

At every 33rd revolution of the blower motor the breaker contacts for the metering pump generate an impulse and the pump makes an audible stroke.

Pump strokes in 1 minute x 33 = motor rpm

The speed should be 6400–7000 rpm at 12 volts after running for 10 minutes.
Replace if necessary.

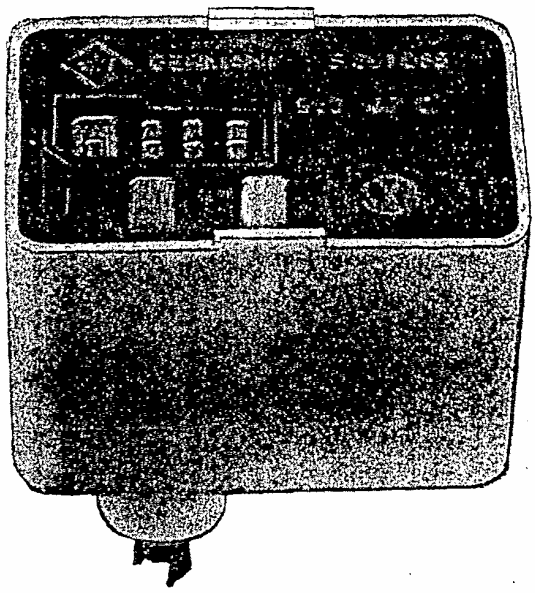

Temperature regulating switch

Regulating ranges:

Upper switching point . . . . . 115 to 143 °C

Lower switching point . . . . . 30 to 40 °C

The switching points can only be measured roughly with an electronic instrument near the temperature sensor.

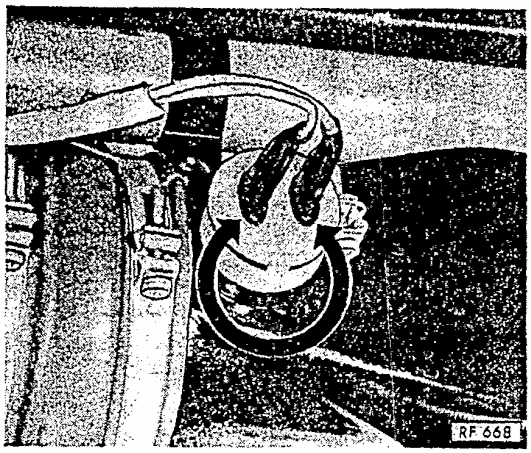

Checking regulation:
(with heater installed)

Switch heater on

Check	Operation on temperature sensor	Condition simulated	Watch pump
Regulation cut-in	Disconnect wires briefly, otherwise overheating switch will work	cold air	must deliver
Regulation cut-out	Bridge contacts	hot air	must stop delivering

Replace if regulation does not take place.

Check the temperature sensor if regulation takes place.

If the heater does not regulate properly it will overheat (this can happen, for example, if the temperature sensor is disconnected). The overheating protection device will then respond in an matter of minutes.

Temperature sensor

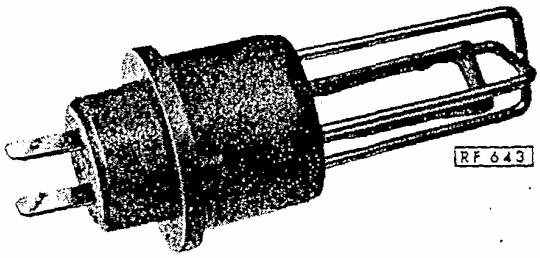

The temperature sensor supplies a temperature-sensitive voltage to the temperature regulating switch.

Properties:

The temperature sensor is a temperature-sensitive resistance which has a high resistance value at low temperatures and a low resistance value at high temperatures.

Resistance:

Measured in water at 60 °C 3.5–5 kΩ

Remedy:

Replace if necessary

Overheating switch

This switch operates and causes a fuse to blow and stop the current flow to the fuel pump when a defect occurs which would make the heater overheat.

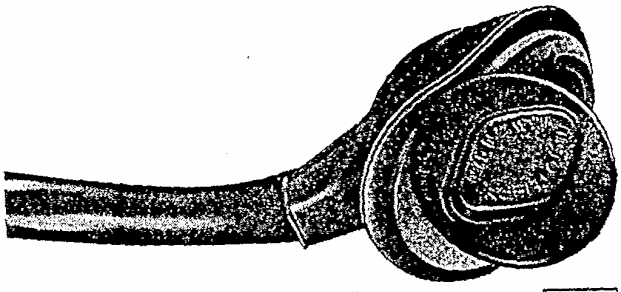

Testing:
(installed)

1 – Switch heater on (vehicle engine not running).

2 – Wait for start-up time (less than 70 seconds).

3 – Disconnect wires on air circulation blower.

4 – Measure the time which elapses from the moment the blower is disconnected to the moment the pump ceases to tick (overheating fuse blown).

Specified time: 60 to 140 seconds.

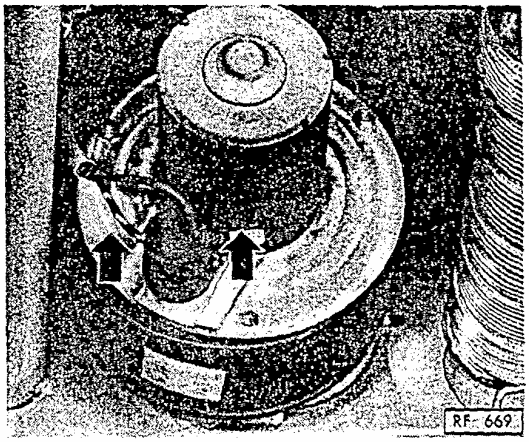

Remedy:

Replace if necessary.

Fuel pump

Checking:

1 – Pull hose off pressure connection.

2 – Fit a piece of hose about 300 mm long on the connection so that fuel can be caught in a measuring glass.

3 – Switch heater on.

4 – Count 200 pump strokes and catch fuel delivered in the glass.

Specified amount: 18.4 to 21.7 cm^3 per 200 strokes.

Remedy:

Replace if necessary

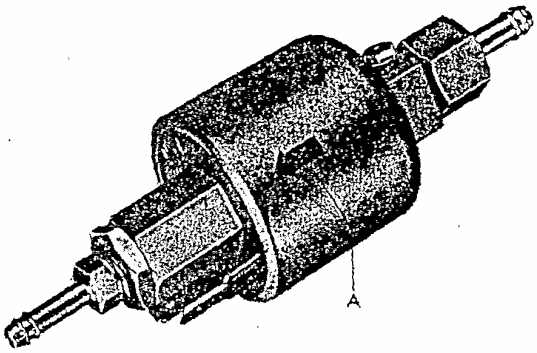

A - Flow direction

) strokes in time with the ticking of the pump is not easy. We recommend therefore
bers 1 to 20 are written on a piece of paper and one number struck off after each

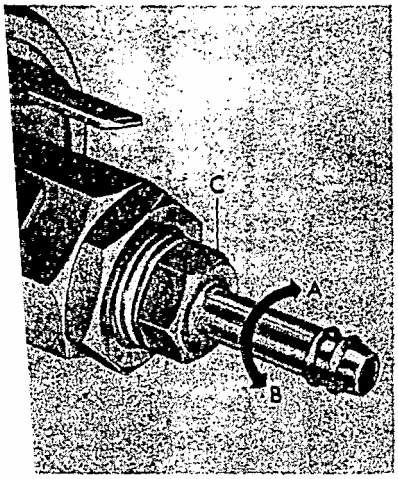

Adjusting:

To increase consumption
= Turn valve guide C to left (arrow B)

To reduce consumption
= Turn valve guide C to right (arrow A)

Tighten the lock nut again afterwards and lock it with paint.

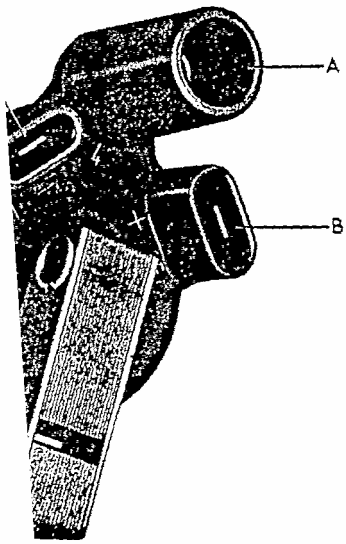

ion

Ignition coil

Current draw:

less than 1 A at 6000 sparks per minute.

Replace if necessary.

Air circulation blower

Current draw (with engine not running)

1st stage (with 1Ω series resistance)
3.2–3.7 A at 13 V

2nd stage
6.8–7.2 A at 13 V

Replace motor if necessary.

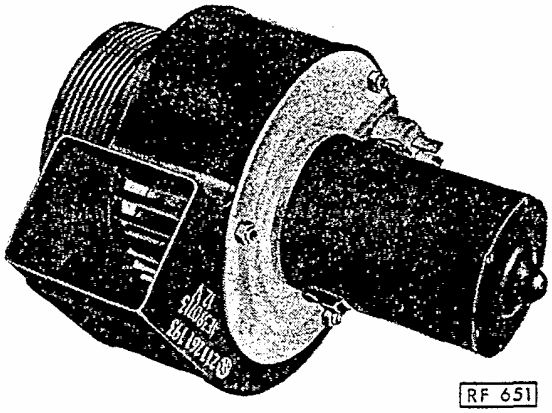

Hot air blower

Current draw 6 to 7 A at 13 volts

(installed and engine running slowly)

Replace motor if necessary.

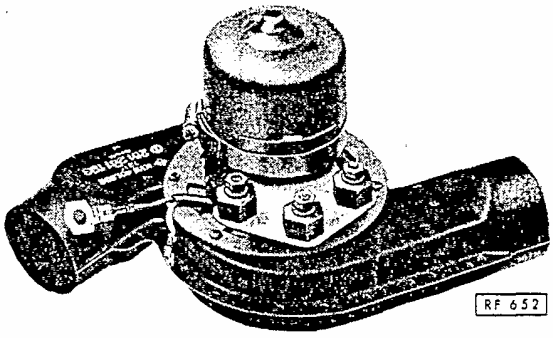

Thermo-switch

1 – This switch controls the start-up time and the glow time of the glow-spark plug.

2 – It also controls the run-on time.

Start-up time:

Less than 70 seconds at room temperature.

Run-on time:

80 – 160 seconds at room temperature.

Replace if necessary.

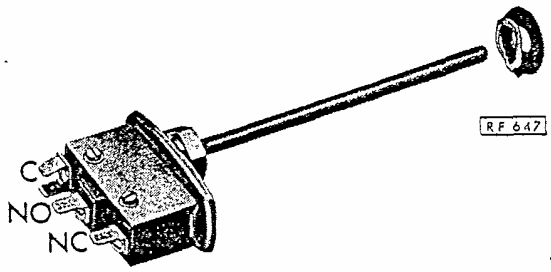

Terminal designations:

C – Common
NO – Normally open
NC – Normally closed

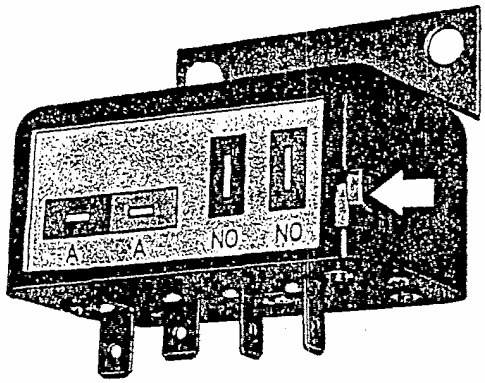

Safety switch

This switch stops the current flow to the heater if, for some reason or other (fuel supply cut off, glow-spark plug defective) combustion does not take place within 230 seconds of switching on.

Checking:

1 – Remove switch.

2 – Connect ohmmeter to terminals A.

3 – Apply 12 volts to terminals NO.

4 – Measure time from moment voltage is applied to moment when contact is broken at terminals A.

Switch response time:

150–230 seconds at room temperature and 12 V.

Replace if necessary.

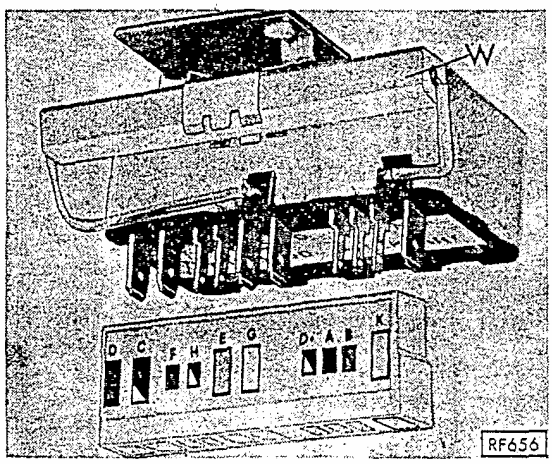

W – Resistance

Relay

Resistance

Series resistance (1 Ohm) for air circulation blower.

Replace if necessary.

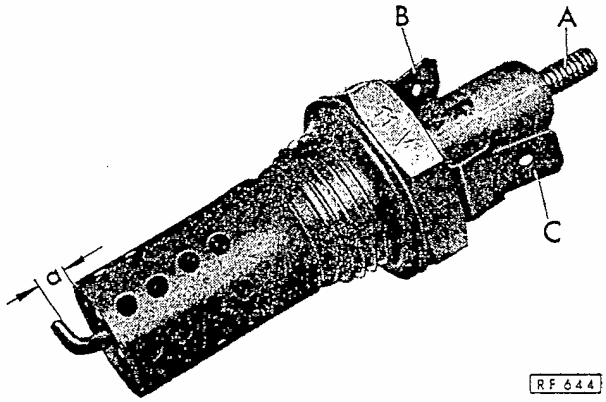

A – High tension connection
B – Glow element connection
C – Earth connection

Glow-spark plug

Electrode gap:	2.5 mm (a)
Suppression resistance:	4 k–6 k
Voltage:	14 Volts
Current draw of glow element at	12 Volts = 10.2 A

Replace if necessary.

Fitting instructions

Combustion air blower

There is a hole in the housing of the combustion air blower (see arrow). When installing blower, ensure that this hole is at the bottom (drain for condensed water).

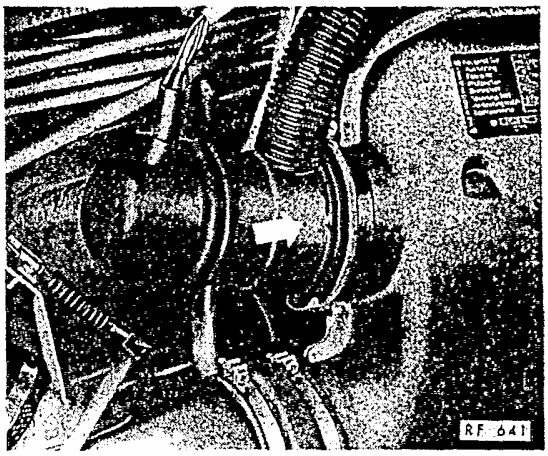

The intake hose for the combustion air must fit tightly on the blower and also in the rear support (If the hose falls off the flame in the heater will destroy the combustion air blower).

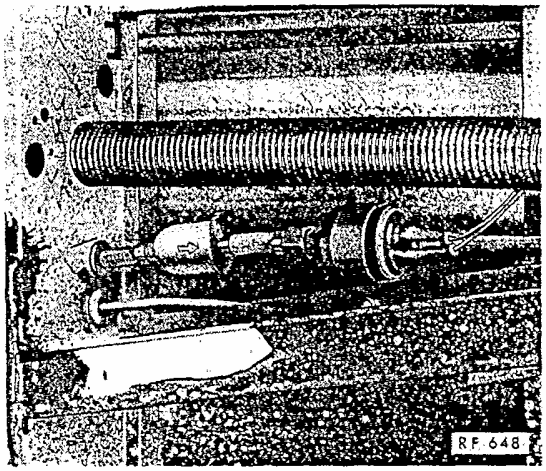

Air circulation blower

There is a hole in the housing of the air circulation blower (see arrow). When installing blower, ensure that this hole is at the bottom (drain for condensed water).

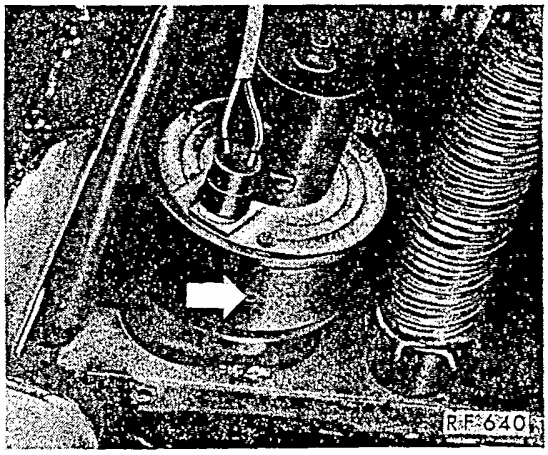

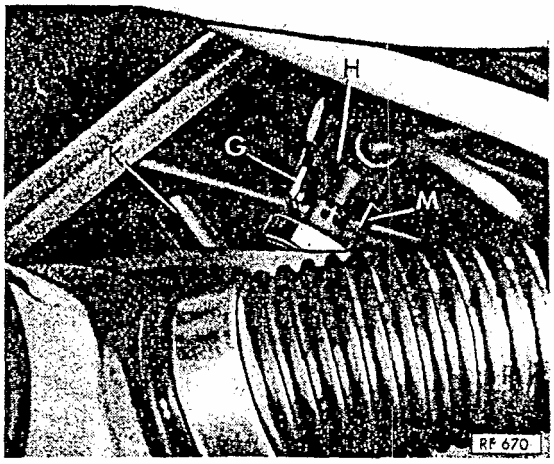

K – Fuel connection
G – Glow element connection, plus
M – Earth connection

Glow-spark plug

The illustration shows what can be done wrong:

a – The terminals of the plug are touching the high tension connector (H). They must be pressed away so that sparks from the central electrode cannot arc through the rubber to the low tension wires.

If the plug is installed as shown, the heater will have ignition trouble (safety switch will respond).

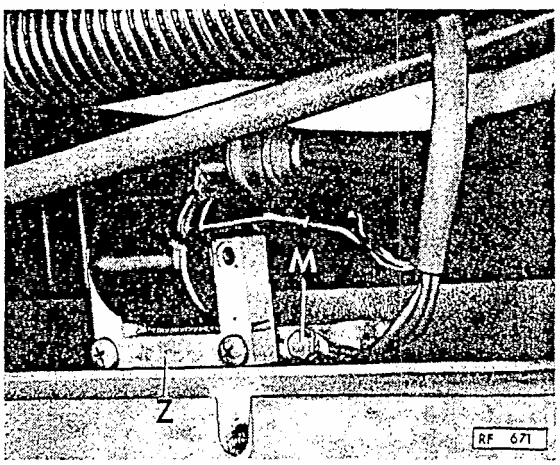

Z – Coil
M – Earthing point on coil bracket

b – Earth wire from plug to earthing screw on coil bracket is not connected.

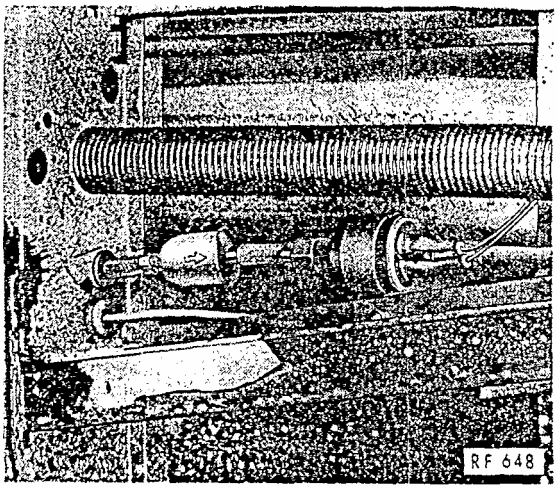

Fuel pump, Filter

Use clips when fitting.

Thermo-switch

The thermo-switch has a feeler tube which projects into the combustion chamber.

This tube is sensitive to bending forces so note the following:

1 – Roll the rubber grommet off and on instead of pulling or pushing it so that a minimum of force is required.

2 – After removing union nut pull switch out vertically and very carefully.

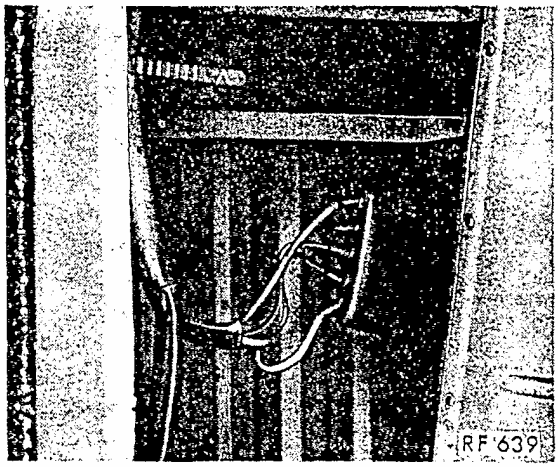

Safety switch

Caution

Disconnect battery earth when working on switch.

The temperature regulating switch will be destroyed by short circuit current if the wires touch one another or vehicle mass when disconnected.

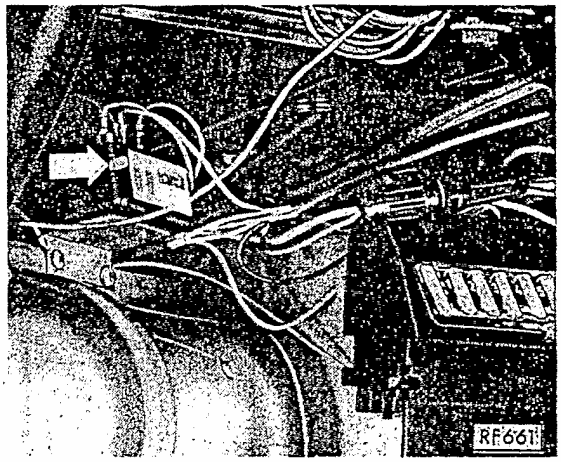

Temperature regulating switch

Caution

1 – Disconnect battery earth when working on switch.

2 – In addition to the multi-pin connector for the switch there are two tabs for terminals 31 and K. If the wires to these terminals are interchanged the switch will be damaged by the short circuit.

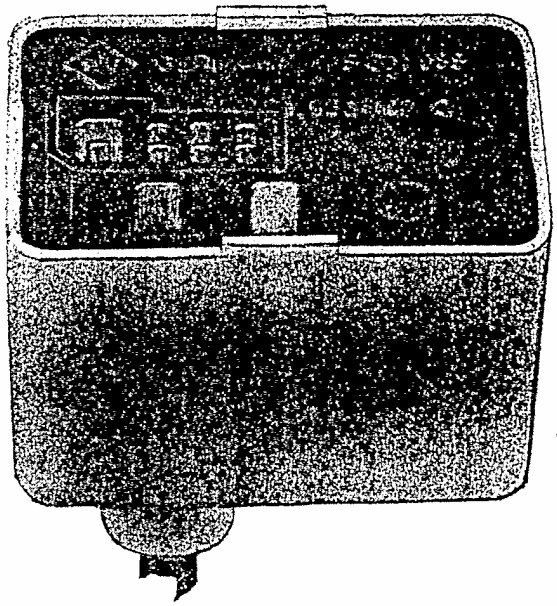

Quick Data	Index

Air cooled – AFC
- Air circulation blower 82.7
- Combustion air blower 82.3, 82.4
  hose 82.4
- Control flaps 82.8
- Defroster/Footwell flaps 82.7
- Flame switch 82.5
- Fuel pump 82.6
- Glow/Spark plug 82.3
- Heater booster/components 82.2
  assembly 82.3
- Heater lever switch 82.8
- Ignition coil 82.6
- Overheat switch 82.4
- Safety switch 82.7, 82.8
- Temperature regulating switch 82.5
- Temperature sensor 82.6
- Troubleshooting (heater booster) 82.10, 82.11

Diesel
- Air circulation blower 82.17
- Combustion air blower 82.14
- Control valve 82.17
- Flame switch 82.15
- Fuel pump 82.17
- Glow/Spark plug 82.14
- Heater housing 82.14
- Ignition coil 82.17
- Overheat switch 82.15
- System components 82.12
- Temperature regulating switch 82.16
- Temperature sensor 82.16
- Troubleshooting 82.18

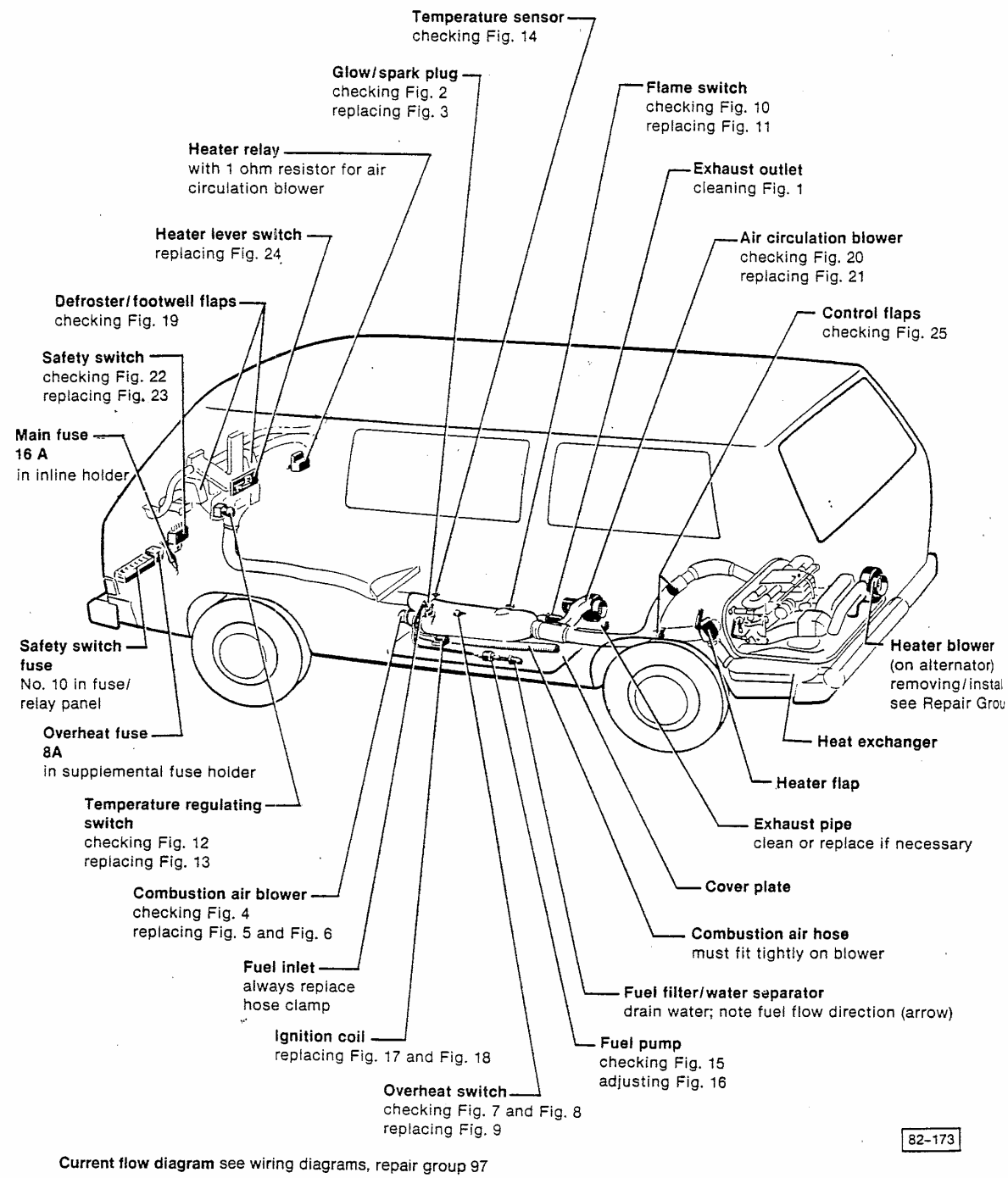

Current flow diagram see wiring diagrams, repair group 97
Troubleshooting page 82.10

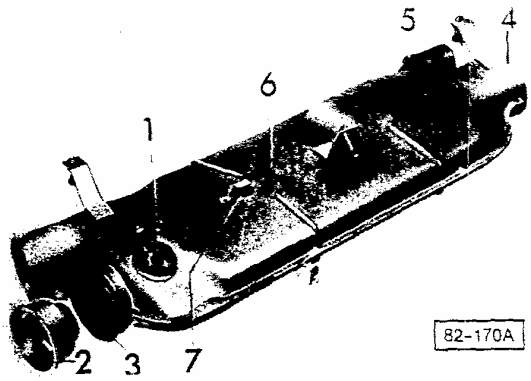

Fig. 1 Heater booster, checking

1 = glow/spark plug adaptor. If carbon-fouled, clean with toothbrush
2 = combustion air blower vane housing. If burned, replace
3 = combustion chamber. If carbon-fouled, clean
4 = fresh air inlet. If dirty, clean
5 = exhaust outlet. If tar-like deposits are noticeable, replace
6 = heater booster housing. If distorted by overheating, replace
7 = ceramic ring for overheat switch. If damaged, replace

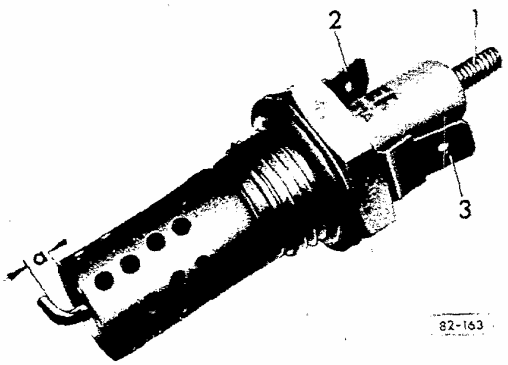

Fig. 2 Glow/spark plug, checking

1 = high tension terminal
2 = glow element terminal
3 = ground terminal

- electrode gap **a** : 2.5 mm (3/32 in.)
- voltage :12 volts
- resistance :4000-6000 ohms
- current draw of glow element :10 A

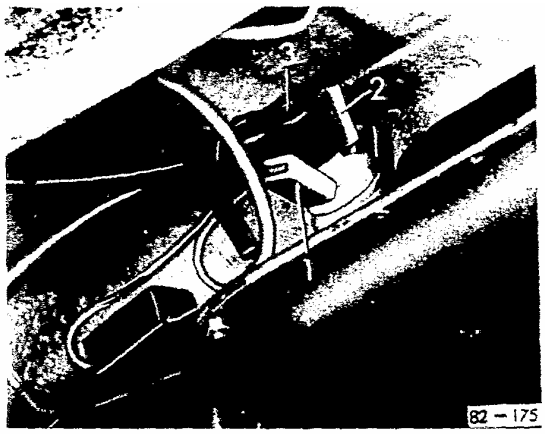

Fig. 3 Glow/spark plug

CAUTION

Connectors for terminals **1** and **2** must not contact plug connector **3**. This may cause ignition trouble

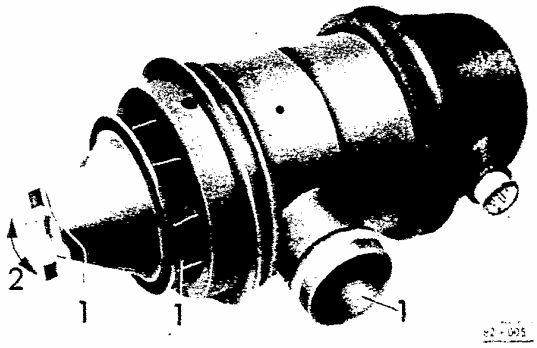

Fig. 4 Combustion air blower, checking

— check for damage caused by overheating at points marked **1**
— check blower bearing **2** for free movement in both directions

Note

Fuel is injected by pump every 33rd revolution of blower shaft. Each injection stroke can be detected by ticking noise from pump

Number of pump strokes × 33 = blower speed

speed: 6400-7000 rpm
(at 12 volts after running for 10 minutes)
- equivalent to 190-210 pump strokes per minute

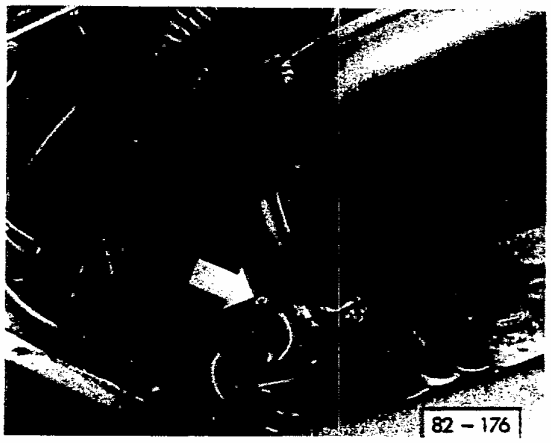

Fig. 5 Combustion air blower, installing

- condensation drain hole in housing must be at bottom (arrow)

Fig. 6 Combustion air hose, installing

- combustion air hose must fit tightly on blower connection and in rear frame cross member.
  If hose comes off, heater flame will damage blower

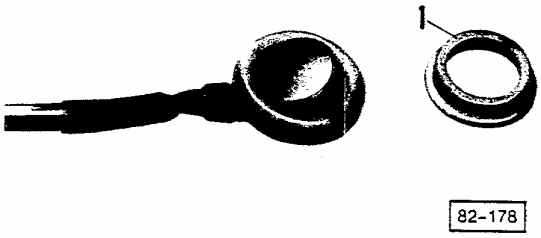

Fig. 7 Overheat switch, checking
(switch installed)

— remove ceramic ring **1** first
— turn heater on (engine not running)
- heater must start working within 70 seconds

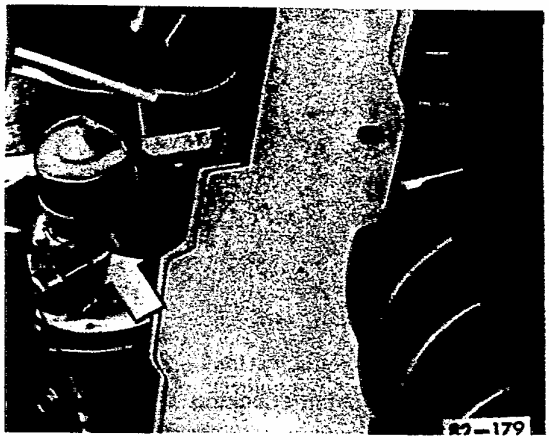

Fig. 8 Overheat switch, checking

— disconnect wiring (arrow) from blower
- if overheat switch operates within 60 seconds after blower is disconnected, switch is **OK** (replace fuse)
- if **NO,** replace overheat switch and fuse

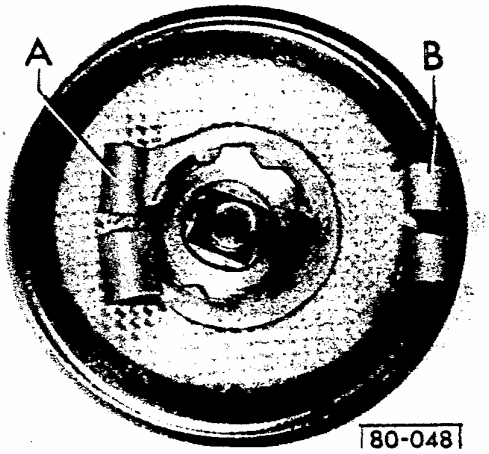

Fig. 9 Overheat switch, installing

— crimp green wire to terminal **A**
— crimp brown wire to terminal **B**
— solder wires (use rosin-core solder)

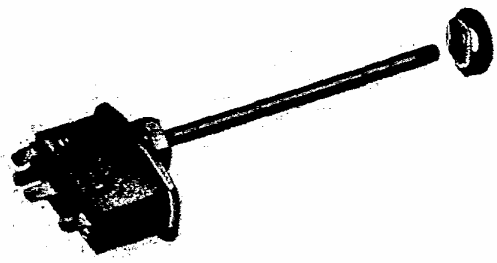

82-010A

Fig. 10 Flame switch, checking
(switch installed)

— turn heater **ON**
- heater must ignite within 70 seconds at 20°C/68°F

— turn heater **OFF**
- run on time must be between 80 and 160 seconds at 20°C/68°F

If **NO** for either condition, replace flame switch

Fig. 11 Flame switch, removing

— pull rubber grommet off carefully
— remove union nut and pull switch out

CAUTION

Do not bend sensor tube

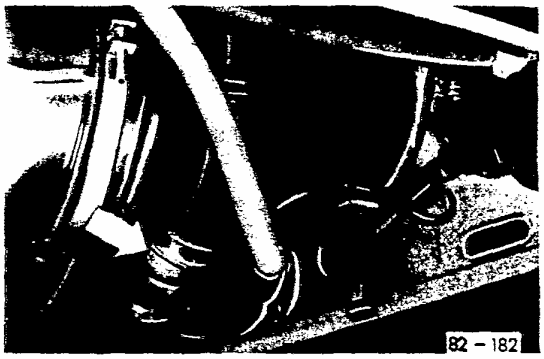

Fig. 12 Temperature regulating switch, checking
(switch installed)

— turn heater on
— disconnect either wire to temperature sensor (very briefly or overheat switch will operate)
- fuel pump should continue to run
  If **YES**, temperature regulation **OK**
  If **NO**, replace temperature regulating switch

— bridge temperature sensor terminals
- fuel pump should stop running
  If **YES**, temperature regulation **OK**
  If **NO**, replace temperature regulating switch
- if temperature regulation is still not correct, check temperature sensor Fig. 14

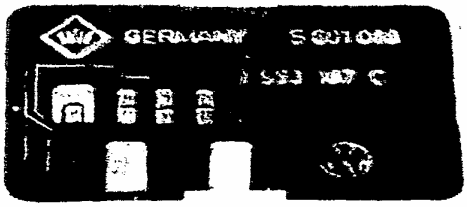

Fig. 13 Temperature regulating switch, replacing

CAUTION

Disconnect battery ground strap before starting to work

— remove escutcheon with VW 674/1
- do not interchange wires of terminals 31 and K (outside of multi-pin connector) as this will cause short circuit in switch

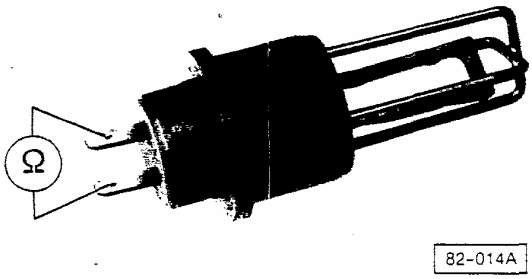

Fig. 14 Temperature sensor, checking

— place in warm water (60°C/140°F)
  • resistance: 3500–5000 ohms

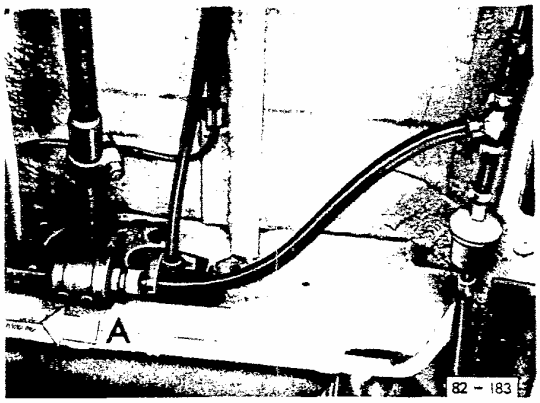

Fig. 15 Fuel pump, checking
(pump installed)

• arrow **A** = direction of fuel flow

> **WARNING**
>
> Fire hazard! Do not smoke or have anything in area that can ignite fuel

— remove hose on pressure side of pump
— connect piece of hose to pump and hold into measuring glass
— turn on heater
— check amount of fuel in measuring glass after 200 strokes of pump
  • amount: 18.4 to 21.7 cm³

Note

To count 200 strokes write down number every 10 strokes.
If delivery rate is not correct, adjust fuel pump per Fig. 16

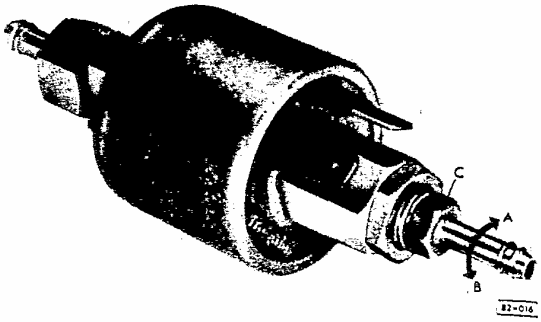

Fig. 16 Fuel pump, adjusting

• to increase amount of delivery: turn hose adaptor **C** in direction of arrow **B**
• to decrease amount of delivery: turn hose adaptor **C** in direction of arrow **A**

— lock and seal with paint after adjustment

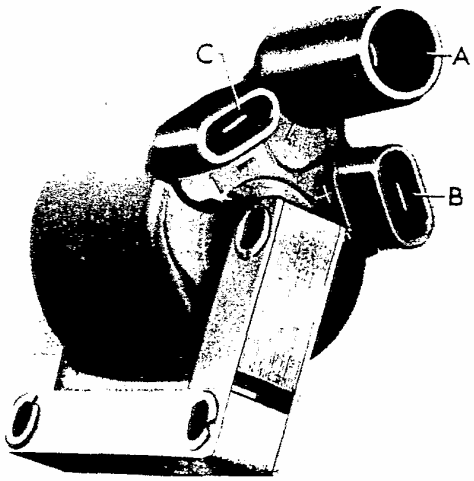

Fig. 17 Ignition coil, connections

A = high tension wire
B = terminal 15
C = terminal 1

Fig. 18 Ignition coil, location

Z = ignition coil

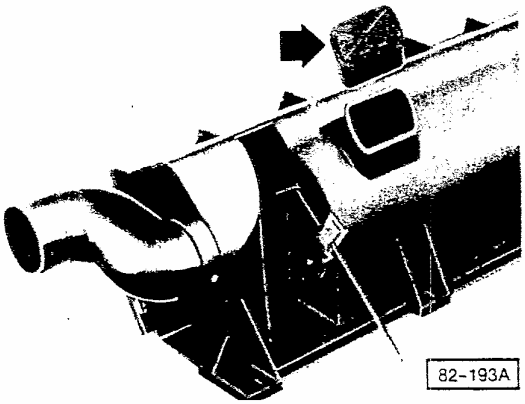

Fig. 19 Defroster/footwell flap, checking

— check flap (arrow) for free movement

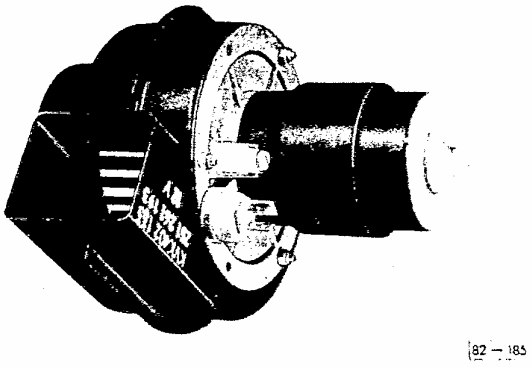

Fig. 20 Air circulation blower, checking (blower installed)

- current draw:
  (engine not running)
  low speed: 3 to 4A
  high speed: 6.5 to 7.5A

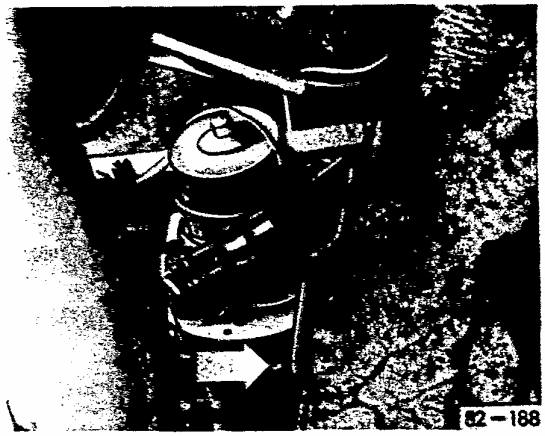

Fig. 21 Air circulation blower, replacing

- condensation drain hole (arrow) must be at bottom

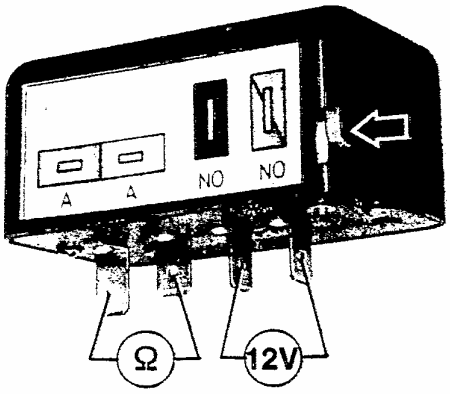

Fig. 22 Safety switch, checking
(switch removed)

CAUTION

Disconnect battery ground strap.
Temperature regulation switch will be damaged if disconnected wires touch one another or ground

— connect ohmmeter to terminals **A**
— apply 12 volts to terminals **NO**
— measure elapsed time when voltage is applied until contact is interrupted at terminals **A**
  - switch response time:
    150 to 230 seconds at 20°C/68°F

  If **NO**, replace switch

Note

If safety switch has operated within required time, press reset lever in direction of **arrow**

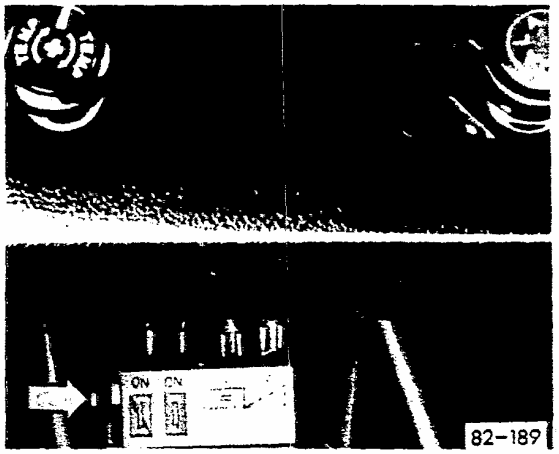

Fig. 23 Safety switch, replacing

— disconnect battery ground strap
• safety switch (arrow)

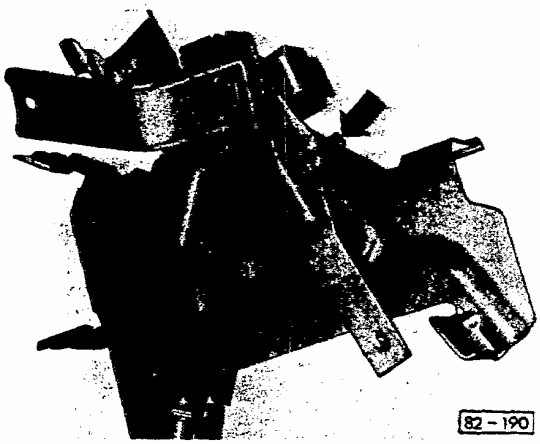

Fig. 24 Heater lever switch contact, location

• switch contact (arrow)
— removing/installing, see Repair Group 80

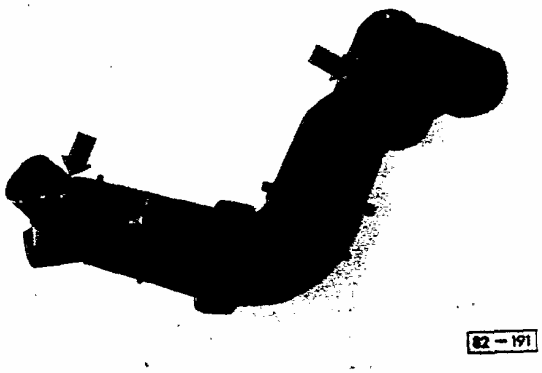

Fig. 25 Control flaps, checking

— remove hoses
— check operation of flaps (arrows)

THIS PAGE INTENTIONALLY
LEFT BLANK

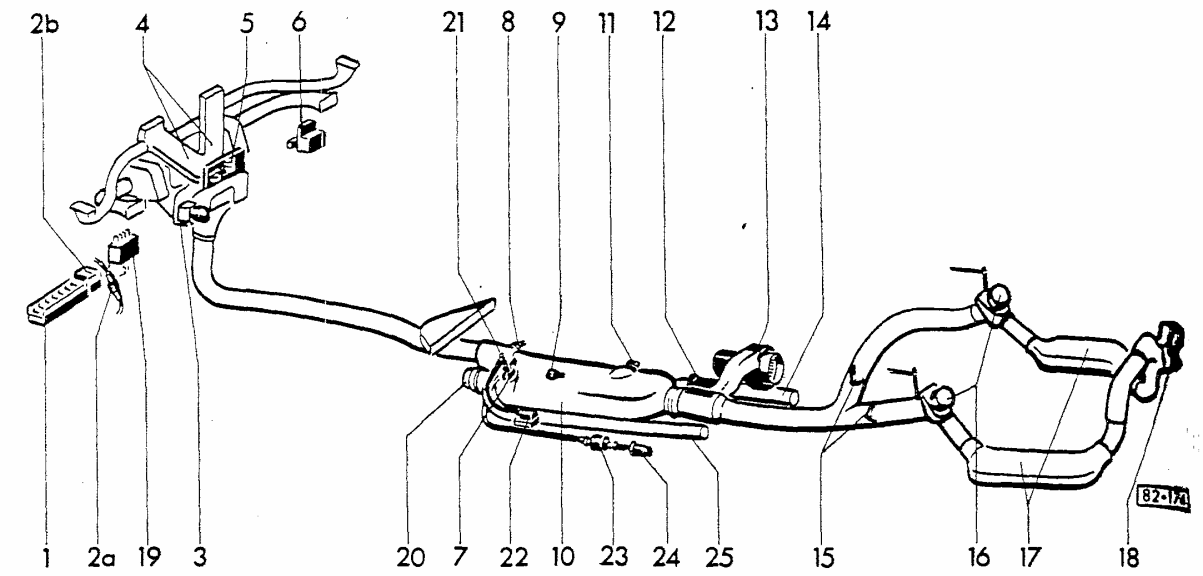

Trouble	Operating conditions
10th fuse (16 A) in fuse relay panel blown	Engine running Heater lever switch **5** ON Temperature regulating switch **3** ON
Main fuse (16 A) in fuse holder blown	Temperature regulating switch **3** ON Heater lever switch **5** ON
Overheat switch **9** has operated and fuse **26** (8 A) has blown	Temperature regulating switch **3** ON Heater lever switch **5** ON
Safety switch **19** has operated	Temperature regulating switch **3** ON Heater lever switch **5** ON
Heater does not run on	Heater and engine turned OFF
Air circulation blower does not run at two speeds	Temperature regulating switch **3** ON Heater lever switch **5** ON Ignition turn ON and OFF
Heater output inadequate and/or heater uses too much fuel	Engine running; heater turned ON
Air circulation blower **13** and combustion air blower **20** continue to run after run on period although heater is turned OFF	Engine running Heater lever switch **5** ON Temperature regulating switch **3** just turned OFF
Heater smokes	Temperature regulating switch **3** ON Heater lever switch **5** ON
Heater does not start up at all	Temperature regulating switch ON Heater lever switch **5** ON

Note

At least 10 volts required for voltage check at flame switch

Trouble caused by	page									
1 — 10th fuse (16A) in fuse/relay panel	Wiring Diagrams									○
2a — Main fuse (16A) in inline fuse holder	Wiring Diagrams								○	
2b — Overheat fuse (8A) in supplemental fuse holder	Wiring Diagrams						○	○	□	
3 — Temperature regulating switch	82.5						▷	○	□	□
4 — Defroster/footwell flaps	82.7			○						
5 — Heater lever switch	82.8	○								
6 — Heater relay	82.2		▷		○		□	□		□
7 — Glow/spark plug	82.3						○		□	
8 — Temperature sensor	82.6						□	▷		
9 — Overheat switch	82.4						▷	□	▷	
10 — Heater booster	82.3						▷	▷		
11 — Flame switch	82.5		○			○	○			
12 — Exhaust outlet	82.2						○	○		
13 — Air circulation blower	82.7						□	○	▷	
14 — Exhaust pipe	82.2	▷					○	▷		
15 — Control flaps	82.8						□	○		
16 — Heater flap	82.2			○						
17 — Heat exchanger	82.2			○						
18 — Heater blower	82.2			▷						
19 — Safety switch	82.7					○	□		▷	
20 — Combustion air blower	82.3	▷					▷	□	▷	
21 — Fuel inlet	82.2						○			
22 — Ignition coil	82.6						▷			
23 — Fuel pump	82.6	○					▷	□		
24 — Fuel filter/water separator	82.2						○			
25 — Combustion air hose	82.2							□		
— Trace circuit in current flow diagram	Wiring Diagrams	▷					□	○	○	○

Symbols denote degree of trouble probability
○ = Highly probable
▷ = Not so probable
□ = Seldom

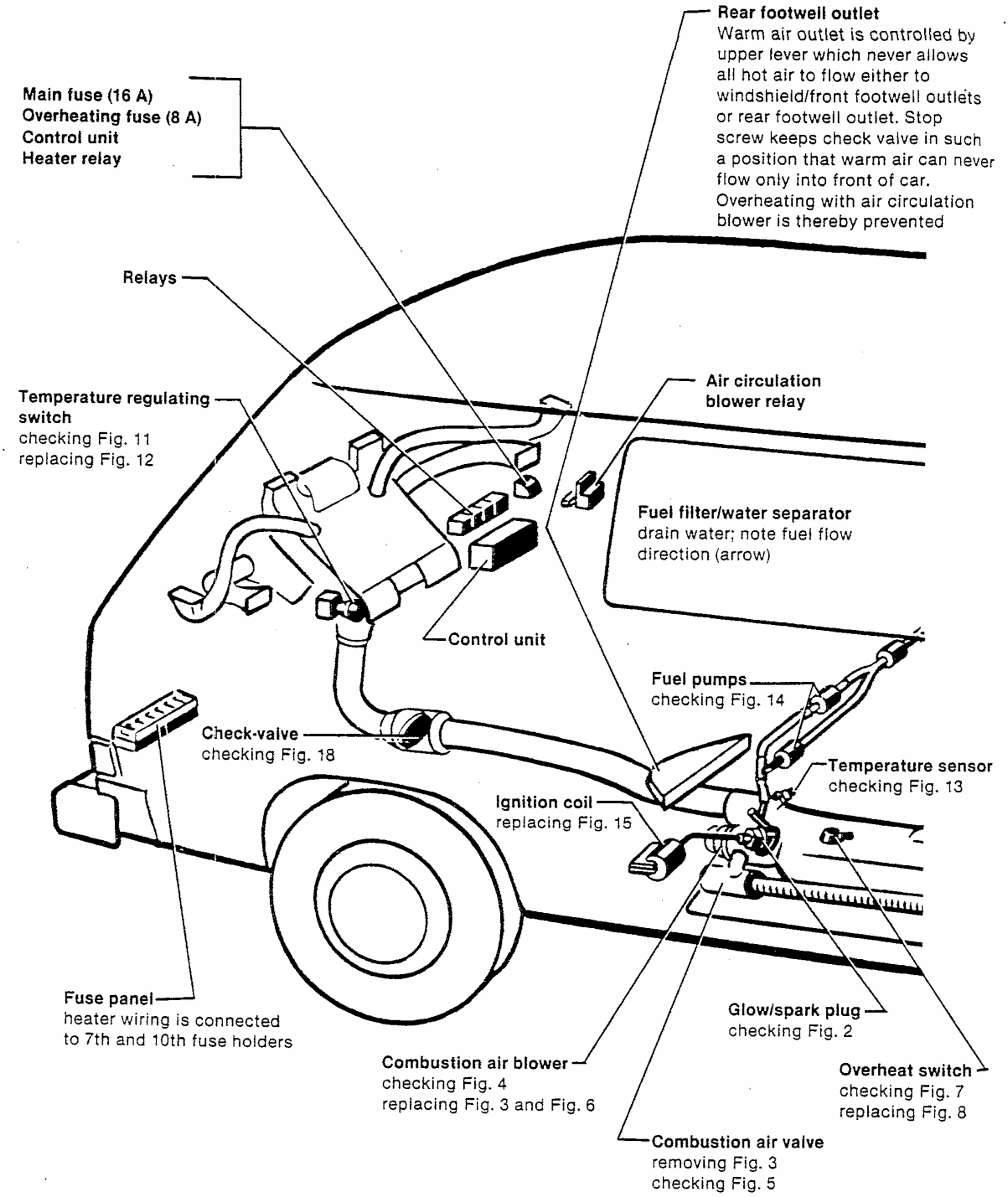

Current flow diagram see wiring diagrams, repair group 97
Troubleshooting page 82.18, 82.19

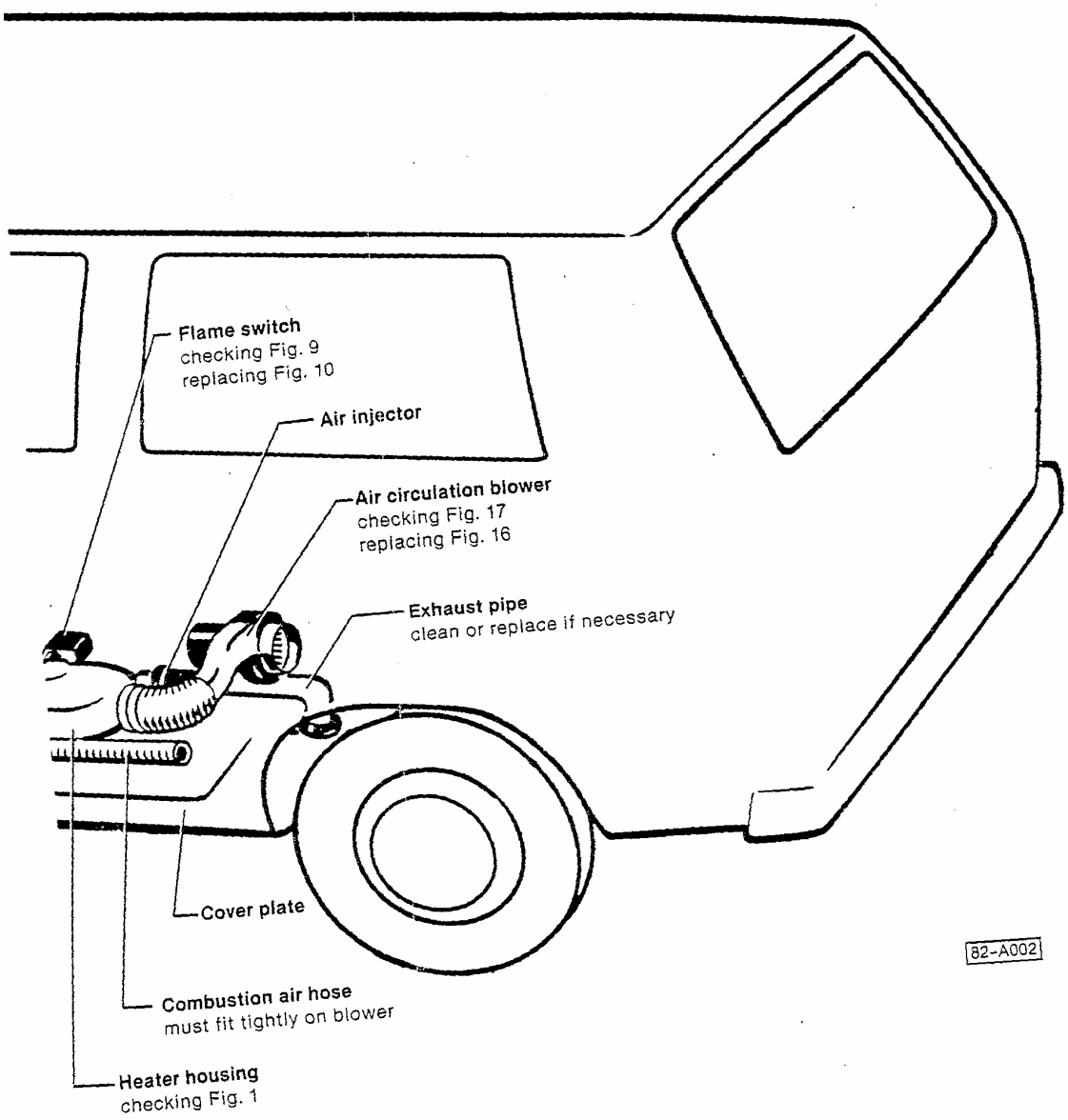
Flame switch
checking Fig. 9
replacing Fig. 10
Air injector
Air circulation blower
checking Fig. 17
replacing Fig. 16
Exhaust pipe
clean or replace if necessary
Cover plate
82-A002
Combustion air hose
must fit tightly on blower
Heater housing
checking Fig. 1

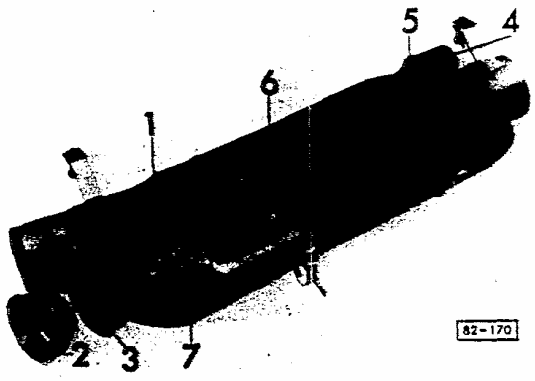

Fig. 1 Heater booster, checking

1 = **Glow/spark plug adaptor.** If carbon-fouled, clean with toothbrush
2 = **Combustion air blower vane housing.** If burned, replace
3 = **Combustion chamber.** If carbon-fouled, clean
4 = **Fresh air inlet.** If dirty, clean
5 = **Exhaust outlet.** If tar-like deposits are noticeable, replace
6 = **Heater booster housing.** If distorted by overheating, replace
7 = **Ceramic ring for overheat switch.** If damaged, replace

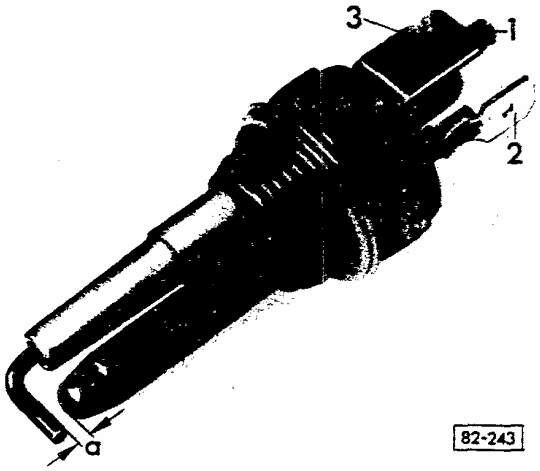

Fig. 2 Glow/spark plug, checking

1 = high tension terminal
2 = glow element terminal
3 = ground terminal

- electrode gap **a** : 2.5 mm (3/32 in.)
- voltage : 12 volts
- resistance : 4000-6000 ohms
- current draw of glow element : 9A at 11V

Fig. 3 Combustion air blower/combustion air valve, removing

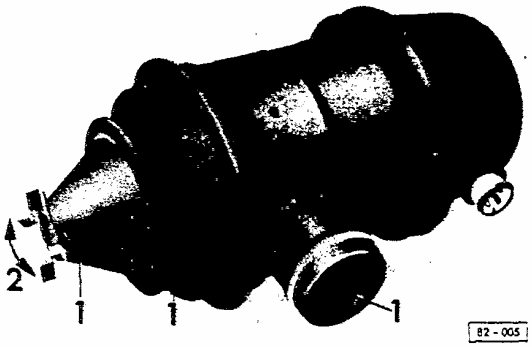

Fig. 4 Combustion air blower, checking

—check for damage caused by overheating at points marked **1**
—check blower bearing **2** for free movement in both directions

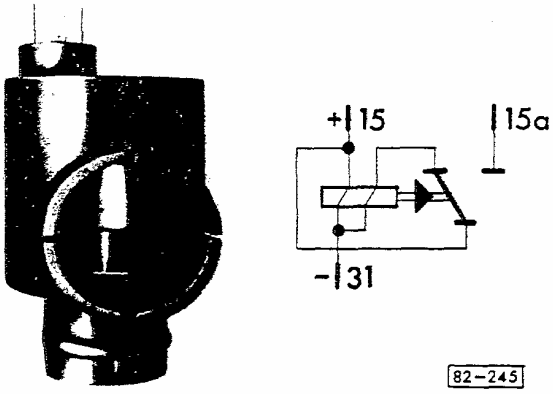

Fig. 5 Combustion air valve, checking

—connect ground wire to terminal 31
—connect hot wire to terminal 15
• air intake valve must open
—press valve plate against stop
• check for current flow between terminals 15 and 15a

Fig. 6 Combustion air blower, installing

- combustion air hose must fit tightly on blower.
  If hose comes off, heater flame will damage blower

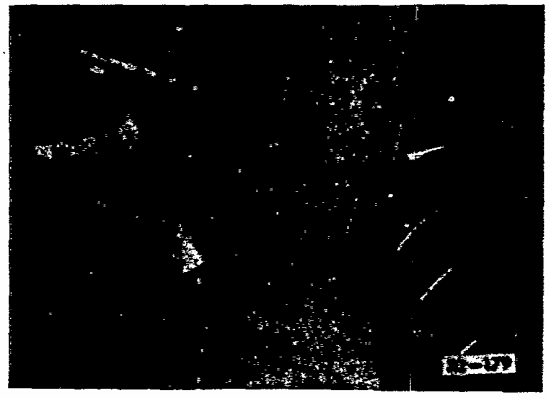

Fig. 7 Overheat switch, checking

—turn heater ON and select highest heating
—wait until blowers run at highest speed (flame switch has cut off glow plug)
—disconnect air circulation blower (arrow)
—wait for 90 seconds and reconnect air circulation blower
- if fuel pump starts running, overheat switch is **OK**
- if fuel pump does not start running within 90 seconds, overheat fuse is blown
  —replace overheat switch

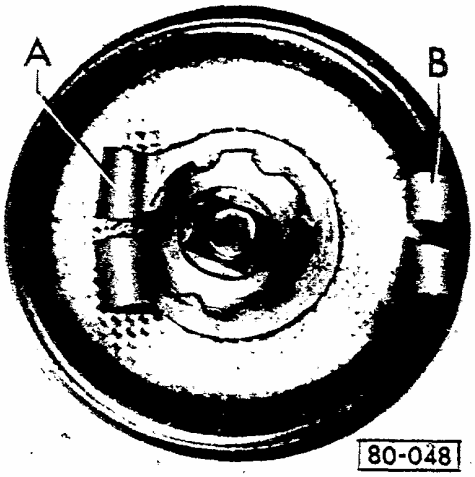

Fig. 8 Overheat switch, replacing

—crimp green wire to terminal **A**
—crimp brown wire to terminal **B**
—solder wires (use rosin-core solder)

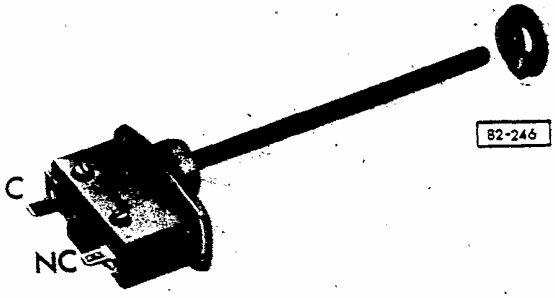

Fig. 9 Flame switch, checking
(switch installed)

—turn heater **ON**
- heater must ignite within 100 seconds at 20 °C/68 °F

—turn heater **OFF**
- run-on time must be approx. 180 seconds at 20 °C/68 °F

If **NO** for either condition, replace flame switch

Fig. 10 Flame switch, removing

—pull rubber grommet off carefully
—remove union nut and pull switch out

> **CAUTION**
>
> Do not bend sensor tube

Fig. 11 Temperature regulating switch, checking (switch installed)

—turn heater ON and wait until blower speed increases
—bridge temperature sensor terminals (arrow)
- one fuel pump (small quantity) must start running

—remove bridge on connector for temperature sensor
- other fuel pump (large quantity) must start running

if under both conditions, fuel pumps are running, temperature regulating switch is OK

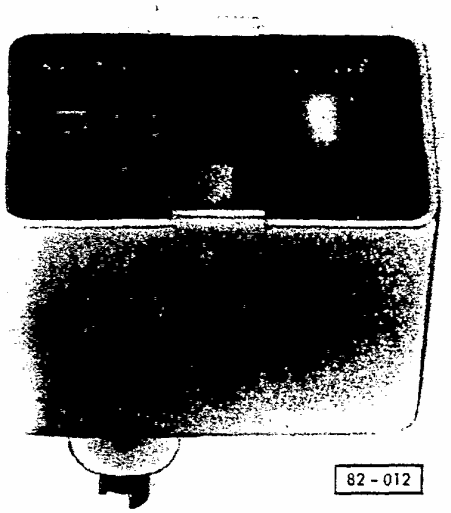

Fig. 12 Temperature regulating switch, replacing

> **CAUTION**
>
> Disconnect battery ground strap before starting to work

—remove escutcheon with VW 674/1
- do not interchange wires of terminals 31 and K (outside of multi-pin connector) as this will cause short circuit in switch

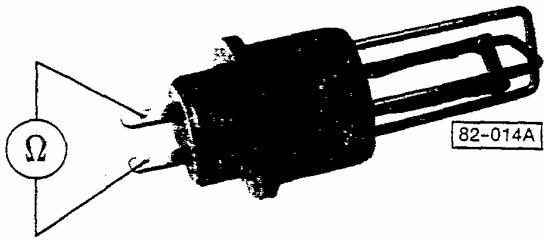

Fig. 13 Temperature sensor, checking

—place in warm water (60°C/140°F)
- resistance: 3500-5000 ohms

Fig. 14 Fuel pump, checking
(pump installed)

1—**Fuel pump for small quantity** (Spare Part No. 251 261 467 A)
2—**Fuel pump for large quantity** (Spare Part No. 251 261 467 B)
3—**T-connector**
—disconnect hose between heater and T-connector (3) at connector and hold into measuring glass
—turn heater ON and wait until pump starts pumping
—check amount of fuel in measuring glass after 100 strokes of pump
• amount: 4.5-5 cm³
—connect green/yellow wire of fuel pump (1) to fuel pump (2)
—turn heater ON and wait until pump starts pumping
—check amount of fuel in measuring glass after 100 strokes of pump
• amount: 8-9 cm³

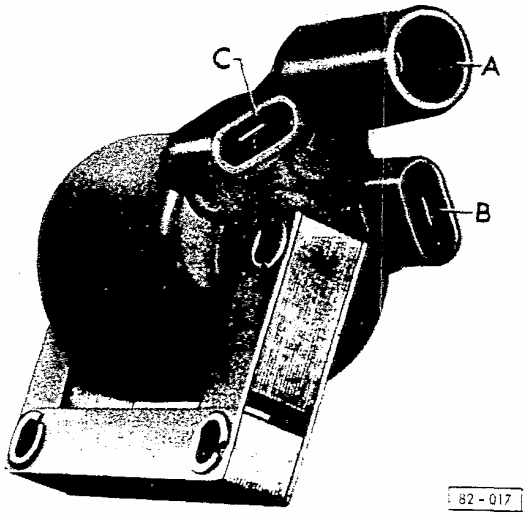

Fig. 15 Ignition coil, connections

A = high tension wire
B = terminal 15
C = terminal 1

Fig. 16 Air circulation blower, replacing

• condensation drain hole (arrow) must be at bottom

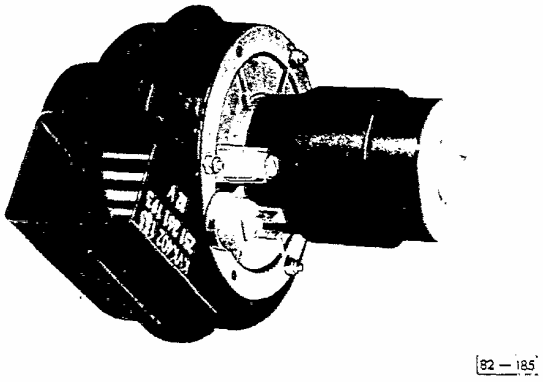

Fig. 17 Air circulation blower, checking (blower installed)

• current draw:
(engine not running)
low speed: 3 to 4A
high speed: 6.5 to 7.5A

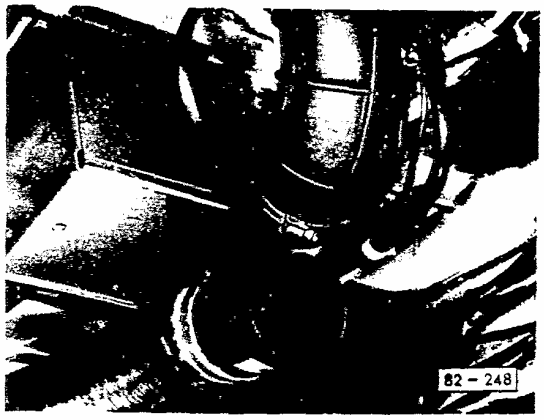

Fig. 18 Control flap, checking

—if 8A overheat fuse is blown, check for free movement of flap

Troubleshooting

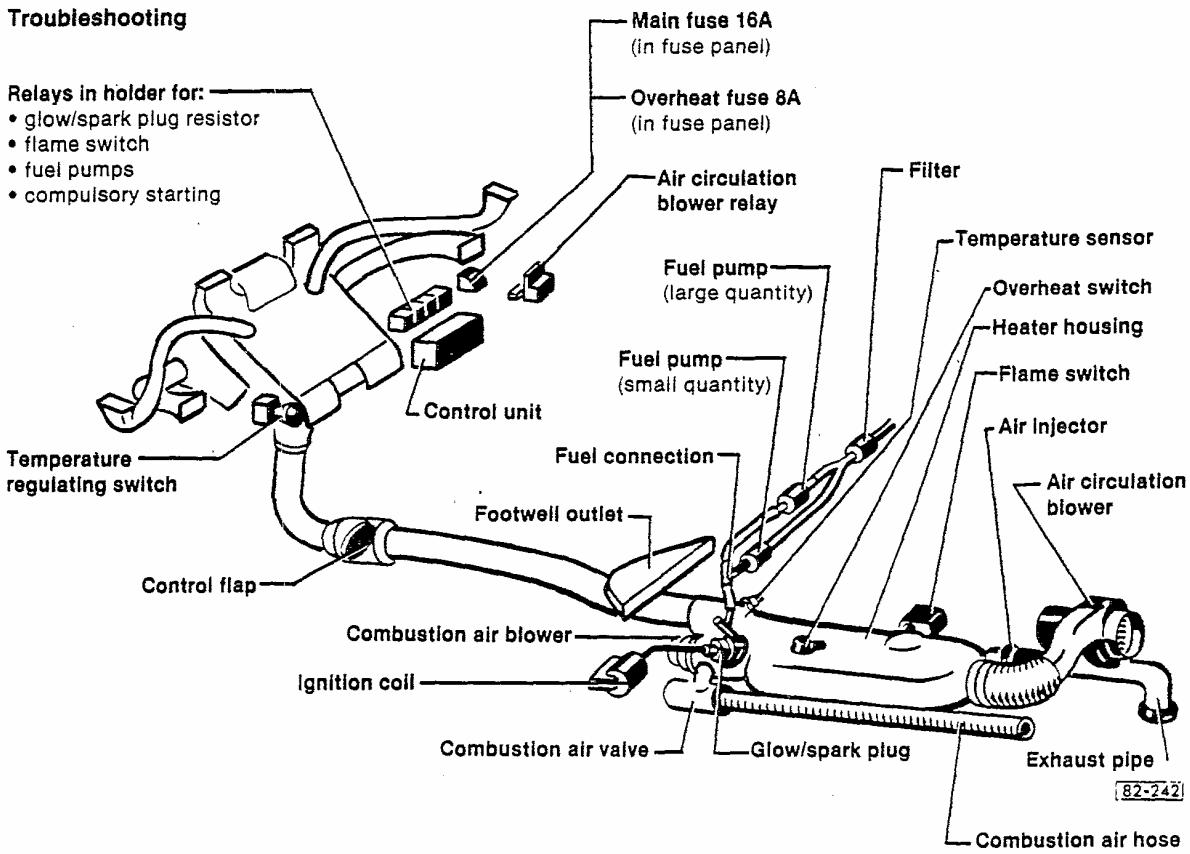

Note

At least 10.3 volts required for voltage check at flame switch

Trouble	Operating conditions
main fuse (16 A) blown	engine running, temperature regulating switch ON
overheat switch operates and overheat fuse blows	temperature regulating switch ON
heater cannot be shut OFF	heater switched OFF
heater does not run on	heater switched OFF
air circulation blower does not run at 2 speeds	temperature regulating switch ON, wait until heater responds, switch ignition ON and OFF
heater output inadequate, small quantity fuel pump always works	temperature regulating switch ON, switch turned to high heating, wait until heater responds
heater output too hot, large quantity fuel pump always works	temperature regulating switch ON, switch turned to low heating, wait until heater responds
heater does not start working at all	temperature regulating switch ON
heater stops working after run-on time	temperature regulating switch ON
heater smokes	temperature regulating switch ON
air circulation blower and combustion air blower continue to run on although heater is turned OFF	engine running, temperature regulating switch was turned ON

Symbols denote degree of trouble probability
○ = Highly probable
▷ = Not so probable
□ = Seldom

Trouble caused by											
main fuse (16 A)	○			○							
overheat fuse (8 A)		○	○		▷						○
temperature regulating switch	□		▷	□	▷	○	○				
control unit	▷		▷	▷	□				○		
relays for: • glow/spark plug resistor	□				□						
• flame switch	□				□				○		
• fuel pumps	□				□		▷				
• compulsory starting	□				□					○	
air circulating blower relay	□				□			○			
glow/spark plug	□				▷						
temperature sensor					□	○	○				
overheat switch		□			▷						
heater housing					○					□	
flame switch		▷		○	○				○		○
air injector		▷			□					□	
air circulation blower				▷	○						
exhaust pipe					○					□	
fuel pump (small delivery quantity)					□						
fuel pump (large delivery quantity)					□						
combustion air valve					○					▷	
combustion air blower				▷	○						
fuel injection connection					□						
ignition coil					▷						
check valve		○			▷						
fuel filter					□						
combustion air hose					□						
footwell outlet		○			▷						
troubleshoot according to current flow diagram	○	○		▷							

Tafel	Gruppe	Bemerkung	Modell/ Kennbuchst:	Modell/ Kennbuchst.	Benennung	Description
21	01				KRAFTSTOFFBEHAELTER	FUEL TANK
21-10	01				KRAFTSTOFFBEHAELTER EINFUELLSTUTZEN	FUEL TANK FUEL FILLER NECK
22	01				AKTIVKOHLEBEHAELTER	ACTIVATED CARBON CONTAINER
23	51		44,46,47,50	44,46,47,50	ABGASROHR	EXHAUST PIPE
23-10	51		62,66,68,70	62,66,68,70	ABGASROHR	EXHAUST PIPE
24	55		44,46,47,50	44,46,47,50	HEIZUNG WAERMETAUSCHER	HEATER HEAT EXCHANGER
24-10	56		62,66,68,70	62,66,68,70	WAERMETAUSCHER	HEAT EXCHANGER
25	59				FRISCHLUFTREGULIERUNG	FRESH AIR CONTROLS
26	61	EBERSPAECHER			STANDHEIZUNG F >> 211 2300 000	STATIONARY HEATER F >> 211 2300 000
27	61	EBERSPAECHER LLKG RLKG EBERSPAECHER LLKG	 NUR FUER "USA"/"CDN"	NICHT FUER "USA"/"CDN"	STANDHEIZUNG F 212 2000 001>> 213 2300 000 F 212 2000 001>> STANDHEIZUNG F 212 2000 001>> 213 2300 000	STATIONARY HEATER F 212 2000 001>> 213 2300 000 F 212 2000 001>> STATIONARY HEATER F 212 2000 001>> 213 2300 000
27-10	61	EBERSPAECHER LLKG RLKG EBERSPAECHER LLKG	 NUR FUER "USA"/"CDN"	NICHT FUER "USA"/"CDN"	STANDHEIZUNG F 212 2000 001>> 213 2300 000 F 212 2000 001>> STANDHEIZUNG F 212 2000 001>> 213 2300 000	STATIONARY HEATER F 212 2000 001>> 213 2300 000 F 212 2000 001>> STATIONARY HEATER F 212 2000 001>> 213 2300 000
27-20	61	 EBERSPAECHER LLKG	 211-271	 211-271	HEIZGERAET HEIZLUFTGEBLAESE HEIZROHR STANDHEIZUNG F 214 2000 001>>	HEATER HOT AIR FAN HEATER PIPE STATIONARY HEATER F 214 2000 001>>
27-30	61	 EBERSPAECHER LLKG	 211-271	 211-271	KRAFTSTOFFILTER ZUENDSPULE SCHALTER RELAIS STANDHEIZUNG F 214 2000 001>>	FUEL FILTER IGNITION COIL SWITCH RELAY STATIONARY HEATER F 214 2000 001>>
3	61				HEIZLUFTGEBLAESE	HOT AIR FAN

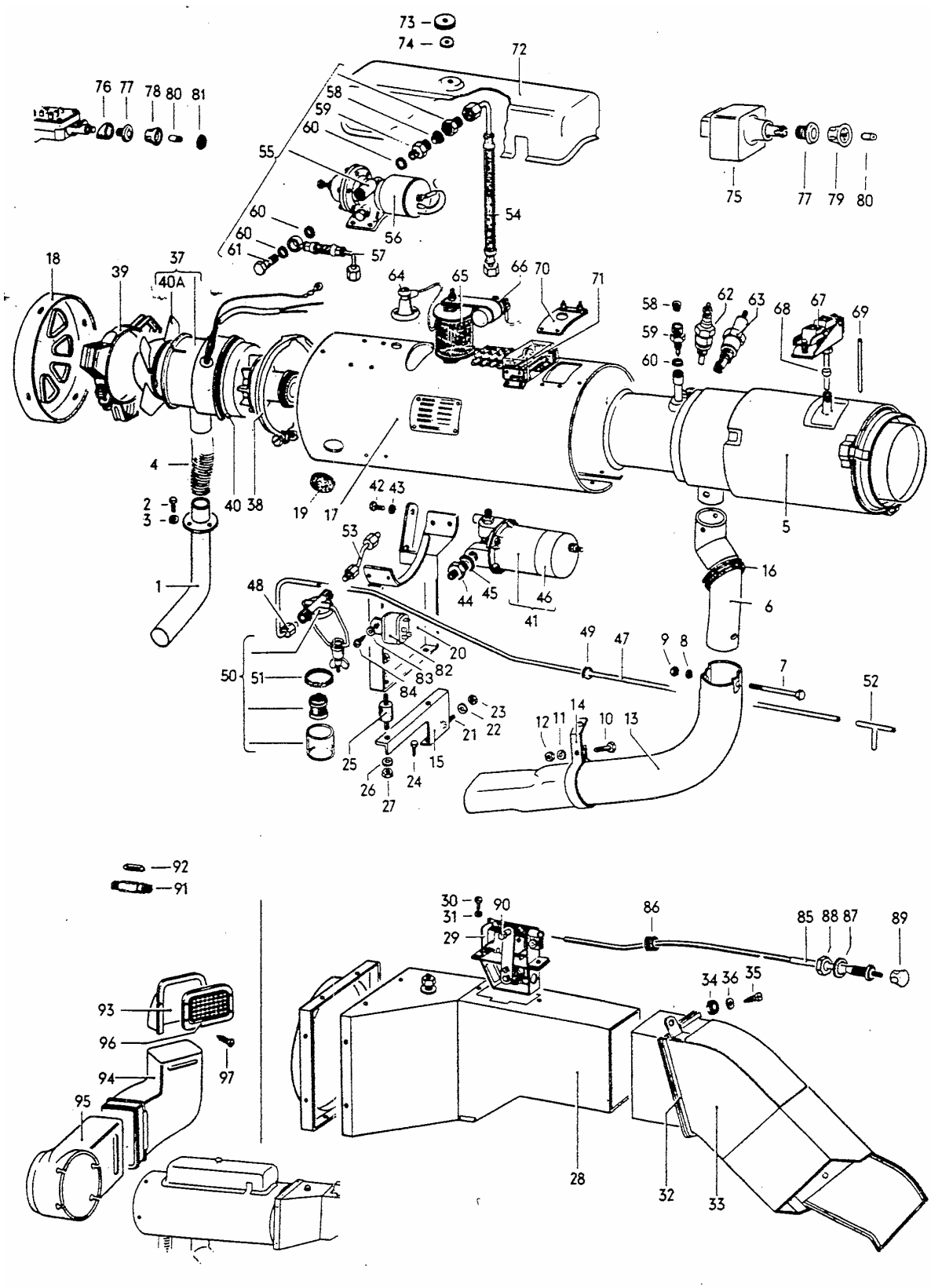
73
74
72
76 77 78 80 81
58
59
60
55
56
54
75
77 79 80
60
60
61
57
18
39
37
40A
64
65
66 70
71
58
59
60
62
63
68
67
69
4
2
3
40 38
19
17
42 43
53
5
16
1
48
44 45
46
41
6
49
47
9 8
20
82
83
84
50
51
7
52
23
22
21
14
12 11
10
13
25
15
26
24
27
92
91
30
31
90
29
86
85 88 87
89
34 36 35
93
96
97
94
95
28
32
33

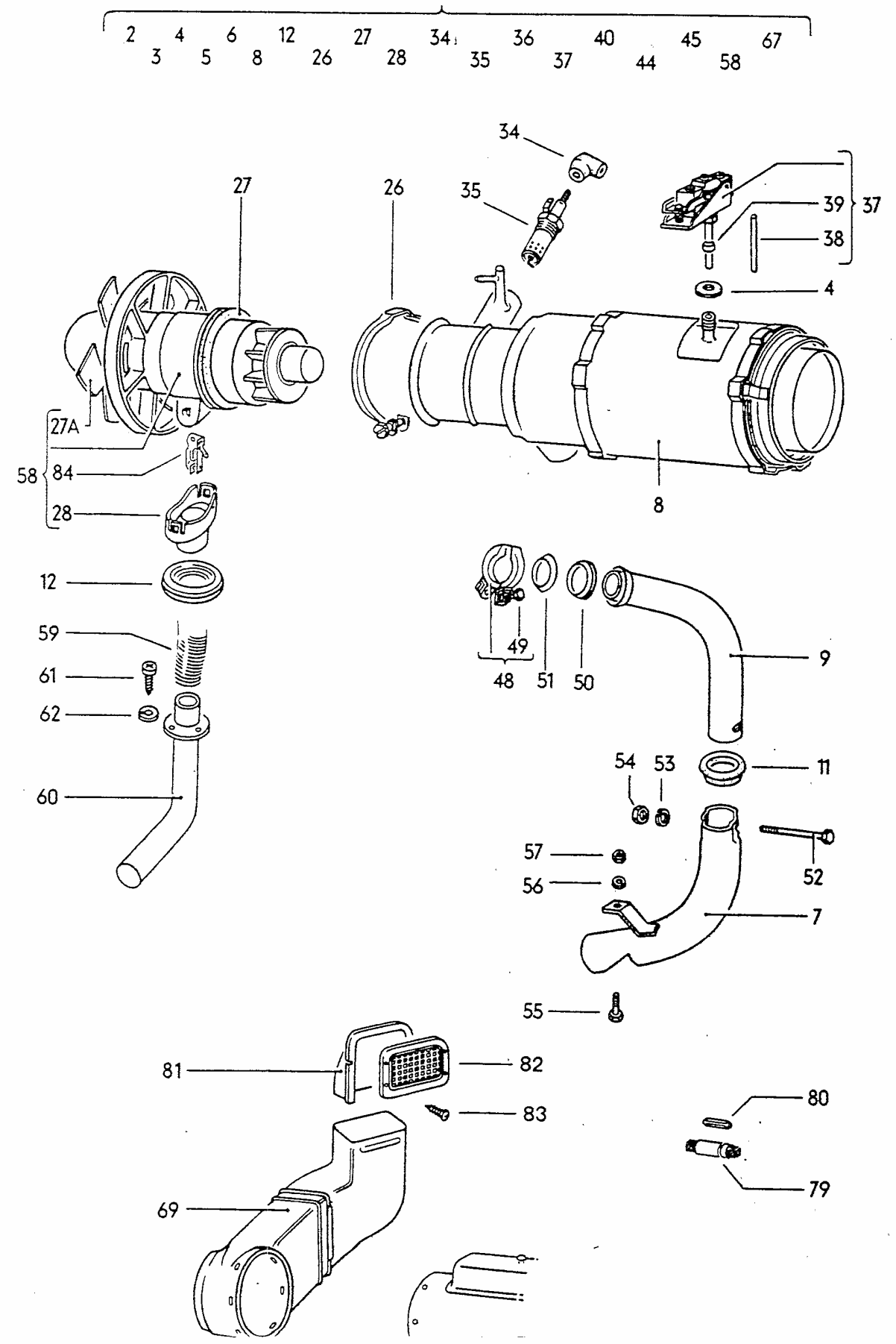
2 4 6 12 27 34 36 40 45 67
3 5 8 26 28 35 37 44 58
34
27
26
35
39
37
38
4
27A
58
84
28
8
12
59
61
62
60
49
48
51
50
9
54
53
11
57
56
52
7
55
81
82
83
80
79
69

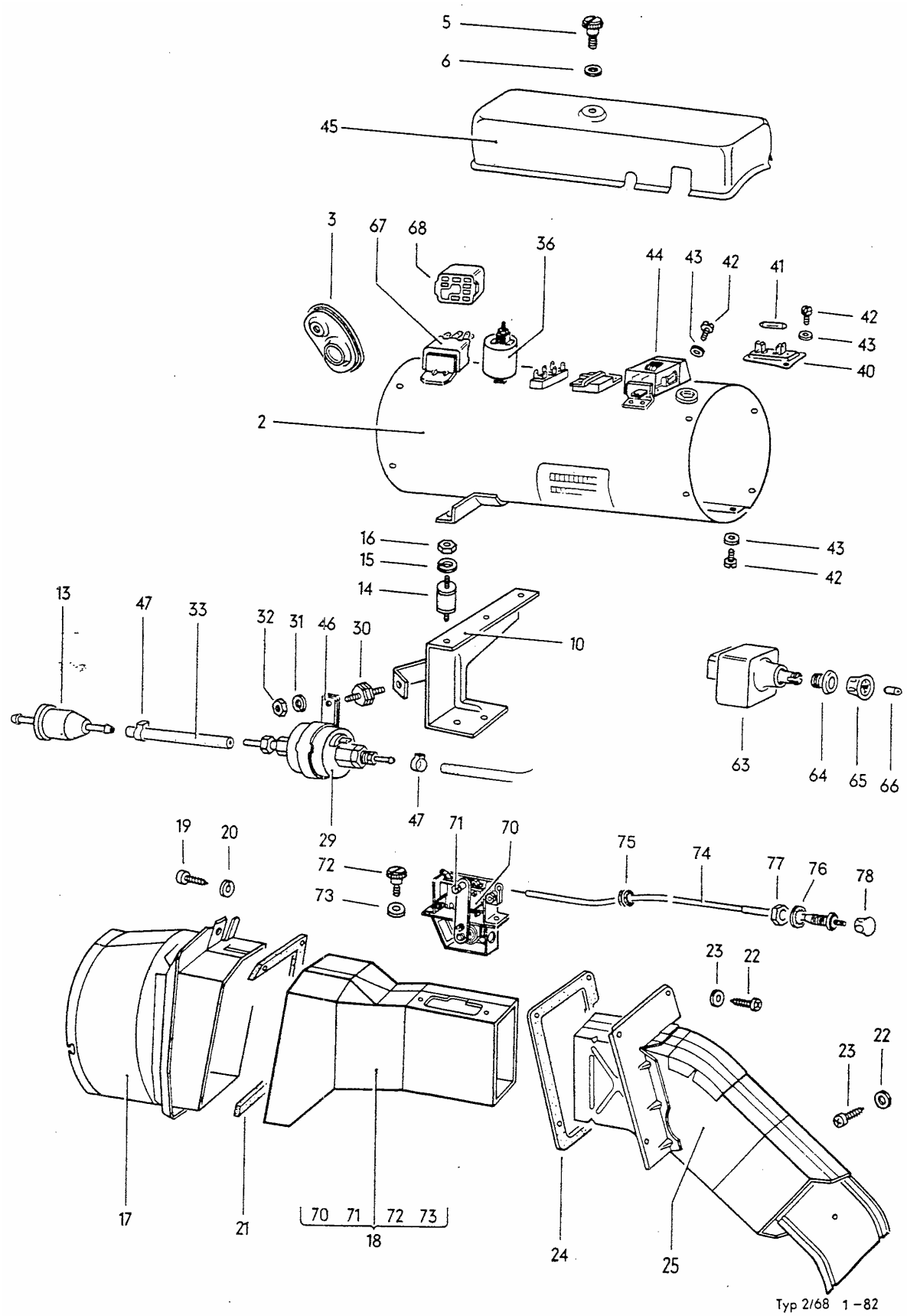
5
6
45
3
67
68
36
44
43
42
41
42
43
40
2
16
15
14
43
42
13
47
33
32
31
46
30
10
63
64
65
66
29
47
19
20
72
73
71
70
75
74
77
76
78
23
22
23
22
17
21
70 71 72 73
18
24
25
Typ 2/68 1 – 82

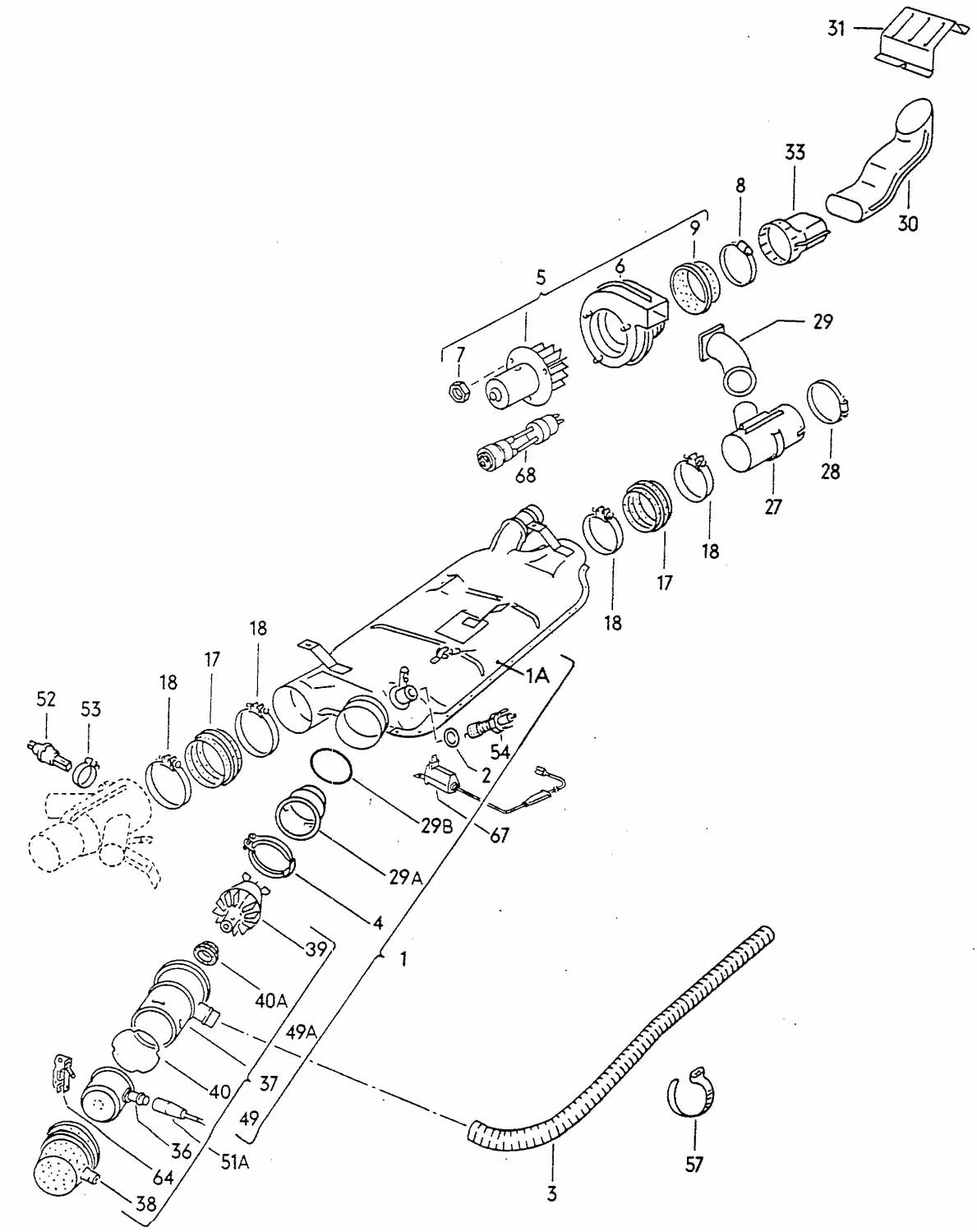
31
33
8
30
9
6
5
29
7
68
28
27
18
17
18
1A
18
17
18
52
53
54
2
29B
67
29A
4
39
1
40A
49A
37
40
49
36
51A
64
38
3
57

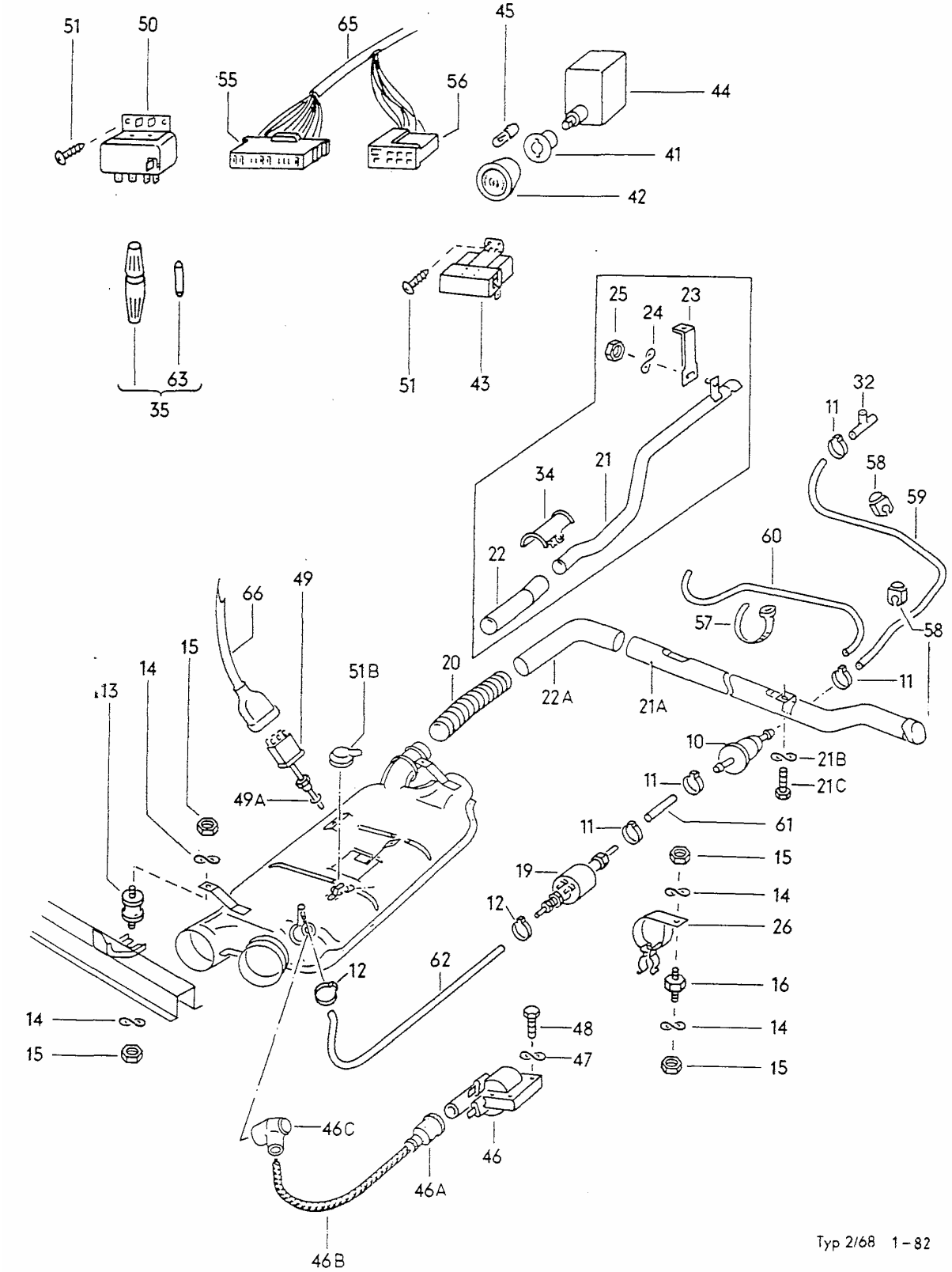
51
50
65
45
55
56
44
41
42
63
35
51
43
25
24
23
32
11
34
21
58
59
60
22
57
58
66
49
15
14
51B
20
22A
21A
11
13
10
21B
21C
49A
11
61
11
15
19
14
12
26
62
12
16
14
48
14
15
47
15
46C
46
46A
46B
Typ 2/68 1-82

BETRIEBSANLEITUNG

FAHRZEUGHEIZUNGEN

Typ BN 4

für sämtliche VW-Transporter
VW-Pritschenwagen mit Doppelkabine
VW-Krankenwagen

J. EBERSPÄCHER
7300 ESSLINGEN
EBERSPÄCHERSTRASSE 24
RUF ESSLINGEN SAMMEL-NR. 3 51 91
TELEGRAMM:
EBERSPACHGLAS ESSLINGENNECKAR
FERNSCHREIBER 07-21 420

Allgemeines

Das Eberspächer Heizgerät BN 4 ist ein stufenlos regelbares Heizgerät von 1080–4000 kcal/h mit eigener Heizquelle. Es arbeitet unabhängig vom Fahrzeugmotor und kann deshalb auch bei stehendem Fahrzeug in Betrieb gesetzt werden. Das Gerät arbeitet nach dem Brennstoff-Luftgemisch-Verbrennungssystem.

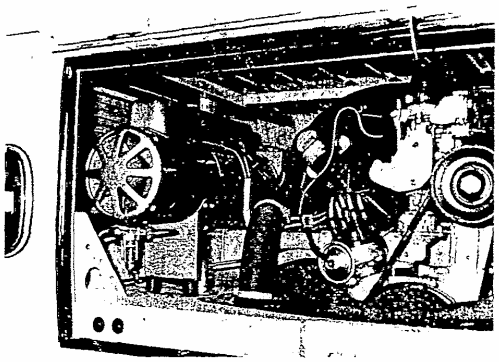

Technische Daten

Heizleistung	stufenlos regelbar von 1080–4000 kcal/h
Warmlufttemperatur	stufenlos regelbar von 40–100 ° C
Frischluftmenge	ca. 150 kg/h
Brennstoff	Benzin
Brennstoffverbrauch	von 0,2–0,65 l/h
Spannung	6 und 12 Volt
Leistungsaufnahme (Stromverbrauch)	50 Watt
Gewicht	ca. 11 kg

Heizleistungs-Schaubild

Erläuterungen zum Heizleistungs-Schaubild

Senkrechter Strahl:	Aufgetragene Heizleistung in kcal/h
Waagrechter Strahl:	Temperatur der aufzuheizenden Außenluft (von + 10 ° C bis – 40 ° C)
Schräge Linien:	Konstante Ausströmtemperatur
Schraffierte Fläche:	Regelfähigkeit der Heizung
Beispiel:	Bei einer Außentemperatur von – 5 ° C beträgt die Min. Heizleistung (I) 1600 kcal/h Max. Heizleistung (II) 3800 kcal/h

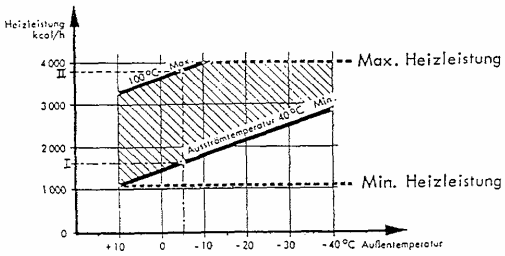

Schnitt- und Schemazeichnung eines Heizgerätes Typ BN 4

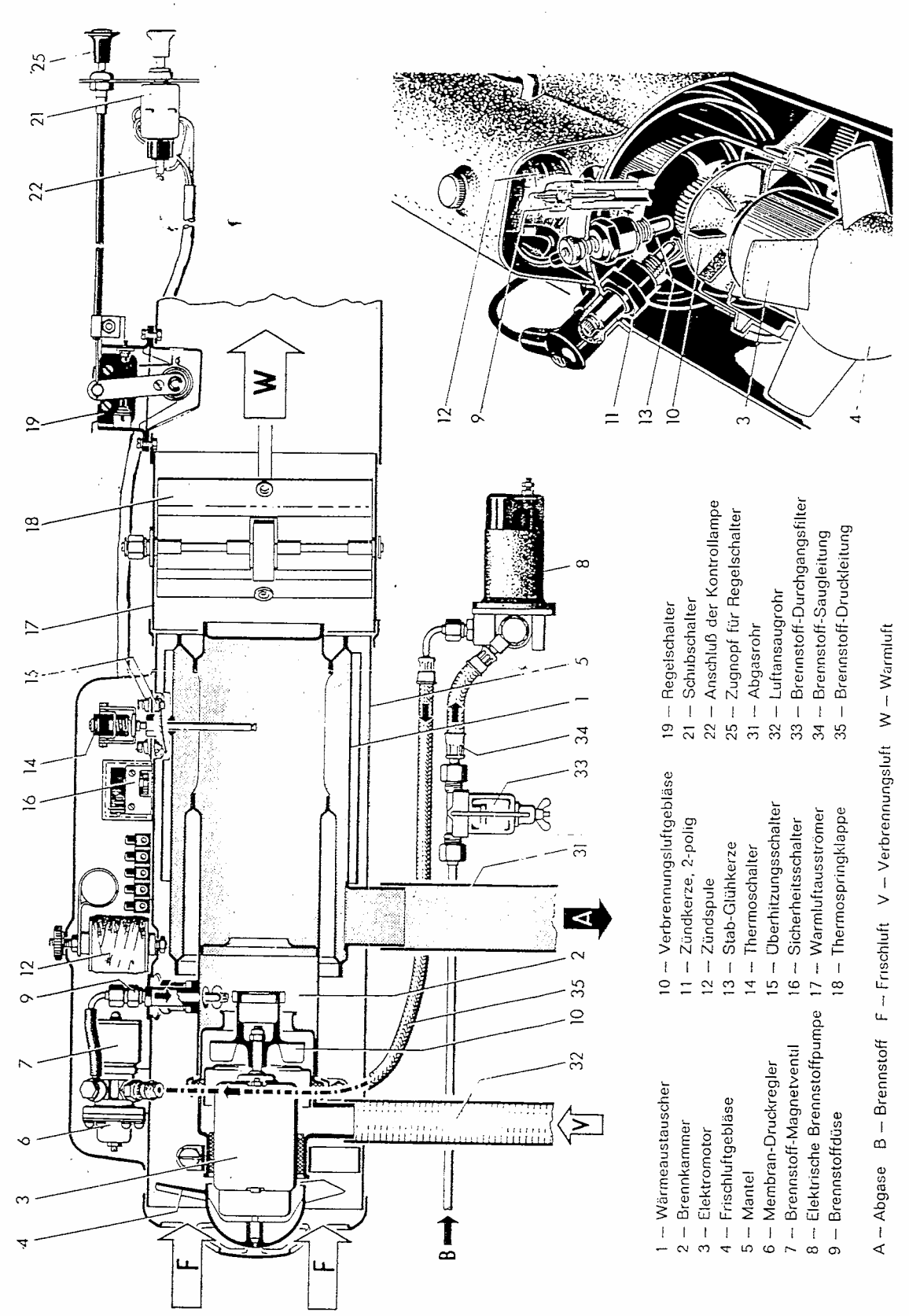

Technische Beschreibung

Die Heizung besitzt einen Wärmeaustauscher, der aus einem zylindrischen Brennraum und einem konzentrisch angeordneten Ringraum besteht, beide sind durch zwei Öffnungen miteinander verbunden, so daß die Abgase den Wärmeaustauscher zum Teil im Gegenstrom durchströmen. Dem zentralen Teil des Wärmeaustauschers vorgebaut ist die Brennkammer, die in ihrer Verlängerung den Elektromotor mit Frischluft- und Verbrennungsluft-Gebläse trägt.

Unter der Abdeckkappe auf dem Außenmantel der Heizung befinden sich der Membran-Druckregler mit dem Brennstoff-Magnetventil, die Brennstoffdüse, die Zündspule, die Stab-Glühkerze, der Thermoschalter, der Sicherheitsschalter und der Überhitzungsschalter.

Seitlich von der Abdeckkappe ist die Zündkerze angeordnet.

Die elektrische Brennstoffpumpe sowie das Brennstoff-Durchgangsfilter liegen an der unteren Hälfte der Heizung. Dort befinden sich auch das Ansaugrohr für Verbrennungsluft sowie das Abgasrohr.

Im Warmluftausströmer, welcher sich an den Wärmeaustauscher anschließt, sind eine Thermospringklappe und ein Regelschalter angeordnet.

Schubschalter und Zugknopf zum Betätigen und Regeln der Heizung befinden sich auf der linken Seite des Sitzkastens im Führerhaus.

Im Schubschalter selbst ist eine Kontrollampe eingebaut.

Arbeitsweise

Das Heizgerät wird durch einen Schubschalter, welcher an der linken Seite des Sitzkastens angeordnet ist, eingeschaltet. Dadurch erhält der Elektromotor des Frischluft- und Verbrennungsluft-Gebläses Strom und beginnt Frisch- und Verbrennungsluft zu fördern.

Die elektrische Brennstoff-Pumpe drückt gleichzeitig über den Membran-Druckregler, Brennstoff-Magnetventil und Brennstoffdüse den Brennstoff in die Brennkammer. Hier trifft der Brennstoff auf den Zahnkranz des Verbrennungsluftrades und wird dadurch zerstäubt.

Die Verbrennungsluft durch ein Leitschaufelgehäuse in Rotationsbewegungen versetzt, bildet nun mit dem zerstäubten Brennstoff ein Gemisch. Die Stabglühkerze erhält Strom und an ihr wird das Brennstoff-Luft-Gemisch aufgeheizt und dadurch zündwilliger gemacht.

Über die Zündspule erhält die Zündkerze ebenfalls Strom und entzündet das Brennstoff-Luft-Gemisch. Die sich entfachende Flamme trifft am Ende des Wärmeaustauschers auf das Fühlrohr des Thermoschalters, der die Stab-Glühkerze wieder abschaltet. Die Zündkerze bleibt während der ganzen Betriebszeit in Aktion.

Nun wird die angesaugte Frischluft entlang des Wärmeaustauschers in den Warmluftausströmer und von dort in den Fahrgastraum gedrückt. Die im Ausströmer eingebaute Thermospringklappe verhindert ein Ausströmen von kalter Luft und öffnet erst bei ca. 35 ° C.

Durch Betätigen des Zugknopfes, der neben dem Schubschalter angeordnet ist, kann die Ausströmtemperatur zwischen 40 ° C und 100 ° C eingestellt werden. Der Regelschalter unterbricht nach Erreichen der gewünschten Temperatur die Stromzufuhr zum Brennstoff-Magnetventil und somit gelangt kein Brennstoff mehr in die Brennkammer. Kühlt sich die ausströmende Warmluft unter die eingestellte Temperatur ab, so erhält, durch Umschalten des Regelschalters das Brennstoff-Magnetventil erneut Strom, öffnet sich, dadurch gelangt neuer Brennstoff in die Brennkammer und der Verbrennungsvorgang beginnt wieder.

Nach Abschalten der Heizung läuft der Elektromotor und damit das Frischluft- und Verbrennungsluft-Gebläse nach ca. 3 Minuten weiter. Dabei wird der Wärmeaustauscher abgekühlt und die Brennkammer von restlichen Verbrennungsgasen freigeblasen. Ist die Ausströmtemperatur auf 40 ° C abgesunken, schließt die Thermospringklappe den Luftkanal ab. Erst nach Erlöschen der Kontrollampe liegt das Gerät still und sämtliche Verbraucher sind abgeschaltet,

Kontroll- und Sicherheitseinrichtungen

Thermoschalter

Beim Einschaltvorgang steuert dieser Schalter den Betrieb der Stab-Glühkerze und des Sicherheitsschalters. Beim Abschalten der Heizung ermöglicht er ein 3 Minuten langes Nachlaufen des Elektromotors für das Frischluft- und Verbrennungsluft-Gebläse.

Sicherheitsschalter

Dieser Schalter unterbricht dann die Stromzuführung zum Brennstoff-Magnetventil, wenn beim Einschalten des Heizgerätes keine Zündung erfolgt, oder aus einem anderen Grund der Verbrennungsvorgang ausbleibt.

Überhitzungsschalter

Dieser Schalter spricht bei Überhitzung des Heizgerätes an und unterbricht den Stromzufluß zum elektrischen Magnetventil; somit gelangt kein Brennstoff mehr zur Brennstoffdüse und der Verbrennungsvorgang wird abgebrochen.

Kontrollampe

Ist das Heizgerät eingeschaltet, so zeigt dies eine im Schubschalter eingebaute Kontrollampe durch Aufleuchten an.

Bedienung

Einschalten

Zugknopf H herausziehen, Kontrollampe K leuchtet auf.

Regeln

Durch Ziehen des zweiten Zugknopfes R läßt sich die Heizung zwischen 1080 und 4000 kcal (40 bis 100 ° C Ausströmtemperatur) regeln.

Durch Herausziehen des Zugknopfes wird die Heizleistung größer.

Ausschalten

Zugknopf H zurückschieben. Nach ca. 3 Minuten erlischt die Kontrollampe.

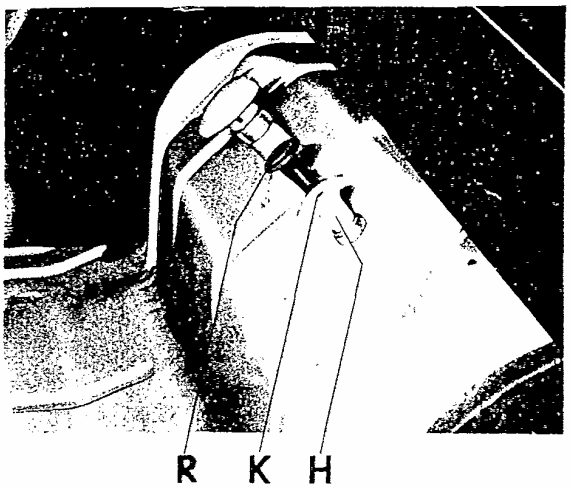

Achtung

Bei Schienentransport des Fahrzeuges, zum Beispiel auf Autozügen, darf die Heizung nicht betrieben werden. Hier könnten, wenn das Fahrzeug gegen die Fahrtrichtung befördert wird, am Heizgerät durch Staudruck auf das Abgasrohr erhebliche Schäden entstehen.

Wartung

Alljährlich vor der Heizperiode:

Glühkerze kontrollieren.

Zündkerze reinigen, auf Abstand prüfen (2,5 mm), evtl. nachstellen.

Brennstoffdüse im Düsenstock reinigen. Brennstoff-Durchgangsfilter reinigen. (Evtl. angesammeltes Wasser aus dem Filterbecher entfernen.)

Klemmen der elektrischen Anschlüsse auf festen Sitz prüfen.

Nach Bedarf: Bei Schmutz und Schneebewurf gelegentlich Ansaug- und Abgasrohr auf sauberen Durchgang prüfen.

Operating manual
Vehicle heaters
Type BN 4
For various VW-Transporters
VW-pickups with double cab
VW-ambulances

General
The Ebersacher heater BN 4 is a continuously-variable control heater of 1080 - 4000 kcal/h with its own heating source. It operates independently of the vehicle engine and can therefore also be used in a stopped vehicle. The heater operates by the fuel-air mixture combustion method.

Technical Data

Heat output	continuously-variable control from 1080-4000 kcal/h
Warm air temperature .	continuously-variable control from 40-100 deg. C
Fresh air quantity ...	ca. 150 kg/hr
Fuel	Gasoline
Fuel consumption	from 0.2-0.65 l/h
Voltage	6 and 12 Volt
Electrical consumption	50 Watt
Weight	ca. 11 kg

Heat output chart

Explanation/legend	for the heat output chart
Vertical scale:	heat output in kcal/hr
Horizontal scale:	temperature of the outside air to be heated (from +10 deg. C to -40 deg. C)
Slanted lines:	constant discharge temperature lines
Hatched area:	heater controllability region
Example:	at an outside temperature of -5 deg. C the minimum heat output (I) is 1600 kcal/h the maximum heat output (II) is 3800 kcal/h

Changes reserved/excepted

Cut-away and schematic diagram of heater type BN 4

1 - heat exchanger	15 - overheating switch
2 - combustion chamber	16 - safety switch
3 - electric motor	17 - warm air discharge
4 - fresh air blower	18 - thermo spring-flap
5 - case	19 - regulating switch
6 - membrane pressure regulator	21 - thrust switch
7 - magnetic fuel valve	22 - socket for control lamp
8 - electrical fuel pump	25 - pull knob for regulating switch
9 - fuel nozzle/jet	31 - exhaust pipe
10 - combusted air blower	32 - air intake pipe
11 - spark plug, bipolar	33 - fuel filter
12 - ignition coil	34 - fuel suction line
13 - rod (-shaped) glow plug	35 - fuel pressure line
14 - thermo switch	

A-exhaust B-fuel F-fresh air V-combustion air W-warm air

Technical Description
The heater contains a heat exchanger which consists of a cylindrical combustion chamber and a concentrically arranged circular chamber, both connected by two openings so that the exhaust gases partially pass through the exchanger upstream. Mounted ahead of the central part of the heat exchanger is the compustion chamber which carries in its extension the electric motor with fresh air and combustion air blowers.

The membrane pressure regulator, along with the magnetic fuel valve, the fuel nozzle, the ignition coil, the rod-shaped glow plug, the thermo switch, the safety switch, and the overheating switch, are located under the cover plate on the exterior case of the heater.

The spark plug is mounted to the side of the cover plate.

The electric fuel pump as well as the fuel filter are located on the bottom half of the heater. The combustion air intake pipe and the exhaust pipe can be found there also.

The warm air discharge, which is attached to the heat exchanger, contains a thermo spring-flap and a regulator switch.

The thrust switch and the pull knob for operating and controlling the heater are located on the left side of the seat in the cab.

The thrust switch itself contains a control light bulb.

Manner of operation
The heater is turned on by a thrust switch which is located on the left side of the seat. This causes the electric motor of the fresh air and combustion air blower to receive current and provide fresh air and combustion air.

At the same time the electric fuel pump pushes the fuel over the membrane pressure regulator, magnetic fuel valve, and fuel nozzle into the combustion chamber. Here the fuel meets the combustion air cogwheel and is atomised.

A mix is formed from the atomised fuel and the combustion air, which has been swirled by an impeller <?>. The rod-shaped glow plug receives current and heats the air-fuel mixture, thus making it more ignitable.

Via the ignition coil, the spark plug also receives current and ignites the air-fuel mixture. The expanding flame touches the sensor of the thermo switch, which in turn turns off the glow plug. The spark plug remains in operation throughout this entire sequence.

Now the fresh air is pushed along the heat exchanger through the warm air discharge into the passenger cabin. The thermo spring flap built in to the discharge prevents cold air discharge and opens only at about 35 deg. C.

The discharge temperature can be regulated between 40 and 100 deg. C by the pull knob next to the thrust switch. After the desired temperature

is reached, the regulator switch interrupts current flow to the magnetic fuel valve, thereby stopping fuel flow to the combustion chamber. If the discharged warm air cools below the selected temperature, the magnetic fuel valve receives current again via the regulator switch and opens, fuel reaches the combustion chamber, and the combustion process starts anew.

After turning off the heater, the electric motor, and thereby the fresh air and combustion air blower, continues to run for another 3 minutes. In this way the heat exchanger cools off and residual combustion gases are blown clear of the combustion chamber. If the discharge temperature drops to 40 deg. C, the thermo spring flap closes off the air tunnel. Only when the control light turns off is the heater completely off.

Control and safety features
Thermo switch
During the turning on sequence this switch controls the operation of the rod glow plug and the safety switch. After turning off the heater this switch enables the 3-minute long running on of the fresh air and combustion air blower.

Safety switch
This switch interrupts current flow to the magnetic fuel valve in case of ignition failure when turning on, or if the combustion process fails for other reasons.

Overheating switch
In case of overheating this switch interrupts current flow to the magnetic valve; fuel can no longer reach the fuel valve and the combustion process is interrupted.

Control light
When the heater is on this light in the thrust switch is on.

Operation
Turning on
Pull out pull-knob H, control light K lights up.

Regulating
Pulling the second pull-knob R regulates the heater output between 1080 and 4000 kcal (40 to 100 deg. C discharge temperature). Pulling out causes increased output.

Turning off
Push in pull-knob H. The control light will turn off after 3 minutes.

BEWARE
When transporting the vehicle by rail, eg on rail wagons for cars, do not operate the heater. If the vehicle is transported in the direction opposite to normal vehicle travel, increased back pressure on the exhaust pipe could cause substantial damage to the heater.

MAINTENANCE
Yearly before the heating period:
- Check the glow plug.
- Clean the spark plug, check the gap (2.5mm), and adjust if necessary.
- Clean the fuel valve and the fuel filter. If necessary remove water that might have collected in the filter receptacle.
- Check that electrical connections are seated well.
- If necessary: periodically check intake and exhaust pipes for clean passage if operating under conditions of dirt or snow.